Newco®

Forged Steel Bolted & Welded Bonnet Gate Valves

Manufactured by Newmans™

Sizes: 1/4" thru 3" • Pressure Class: 150 thru 4500

Rev: 112508.01

Typical Newco Forged Steel Bolted & Welded Bonnet Gate Valve Expanded View

1. Handwheel Nut: *The handwheel nut secures the handwheel to the bonnet assembly.*

2. Handwheel: *The handwheel cycles the valve.*

3. Stem Nut: *The stem nut provides a precision guide for proper stem alignment..*

4. & 11. Gland Bolts & Nuts: *The gland bolt and nut allows for easy adjustments for packing compression.*

5. Stuffing Box: *The stuffing box contains the packing.*

6. Bonnet Bolts: *The bonnet bolts secure the bonnet to the body.*

7. Yoke & Bonnet: *Newco bonnet assemblies are built to the same standards as the bodies. Larger size gate valves utilize a multi-piece bonnet design.*

8. Bonnet Gasket: *The bonnet gasket creates a leakproof seal between the bonnet and body.*

9. Body: *Newco forged steel bodies provide low resistance flow and optimum strength and performance.*

10. Seat Rings: *To ensure a stable shutoff, seat rings are aligned and swaged into the valve, then precision ground for optimal seating.*

12. Gland Flange: *Applies pressure to the gland for accurate packing adjustments.*

13. Gland: *Compresses the packing to create a stem seal above the back seat, between the bonnet and stem.*

14. Packing: *The packing creates a seal above the back seat, between the bonnet and stem.*

15. Stem: *The stem is precision machined and inserts into the horizontal channel in the disc.*

16. Wedge: *Newmans solid wedge is machined to the tightest tolerances to ensure trouble free shutoff and cycling.*

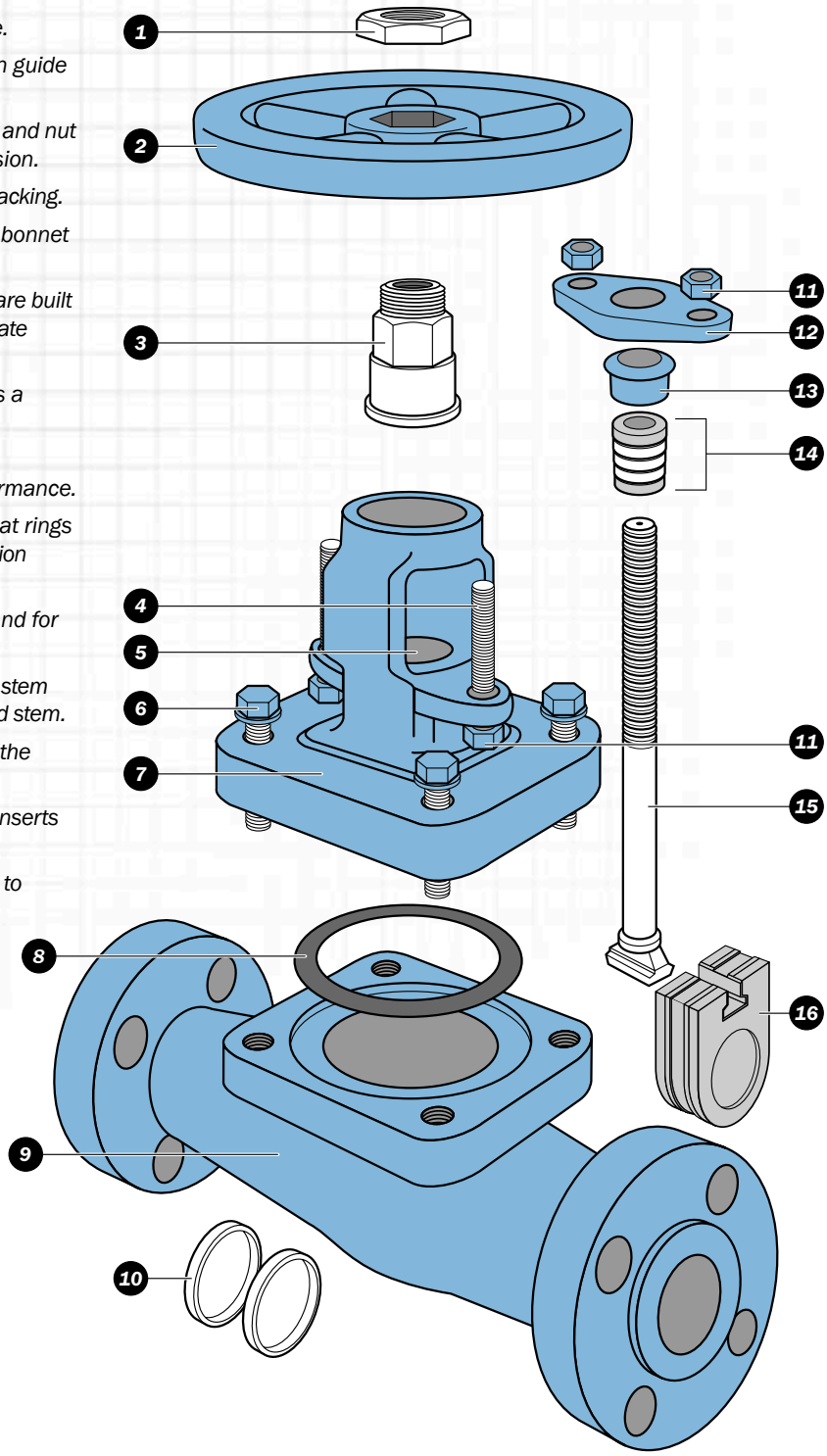

How to Order All Newco Products

Note: *OIC and Cooper "How to Order" information can be found in their respective catalogs.*

Figure Number

The figure number shown below identifies specific valve configuration details of Newco valves such as valve type, pressure class, end connections, body/bonnet & trim materials, and special features.

Please specify end connections, body materials, and trims not listed below.

When placing an order, please refer to the respective product section of the catalog for size availability. A detailed description must be included with any special orders.

Type

1 = Gate, OS&Y
2 = Globe/Globe Stop Check, OS&Y
3 = Swing/Tilting Disc Check
4 = Piston Check
5 = Ball
6 = Gate, NRS
7 = Angle/Angle Stop Check, OS&Y

Fig. 11F-CB2_ _

Body/Bonnet Material

A20	ASTM A351, CN7M	Cast Alloy 20
CB	ASTM A216, WCB	Cast Carbon Steel
CC	ASTM A216, WCC	Cast Carbon Steel
C5	ASTM A217, C5	Cast Alloy Steel (5% Chrome, .5% Moly)
C6	ASTM A217, WC6	Cast Alloy Steel (1.25% Chrome, .5% Moly)
C9	ASTM A217, WC9	Cast Alloy Steel (2.25% Chrome, 1% Moly)
C12	ASTM A217, C12	Cast Alloy Steel (9% Chrome, 1% Moly)
12A	ASTM A217, C12A	Cast Alloy Steel (9% Chrome, 1% Moly, V)
CF3	ASTM A351, CF3	Cast Stainless Steel
C3M	ASTM A351, CF3M	Cast 316L Stainless Steel
CF8	ASTM A351, CF8	Cast 304 Stainless Steel
C7L	ASTM A351, CG3M	Cast 317L Stainless Steel
C8M	ASTM A351, CF8M	Cast 316 Stainless Steel
C8C	ASTM A351, CF8C	Cast 347 Stainless Steel
CT	ASTM A351, CG8M	Cast 317 Stainless Steel
DI	ASTM A395	Cast Ductile Iron
FS	ASTM A105	Forged Carbon Steel
F3M	ASTM A182, F316L	Forged 316 Stainless Steel
F5	ASTM A182, F5	Forged Alloy Steel (5% Chrome, .5% Moly)
F7	ASTM A182, 317	Forged 317 Stainless Steel
F7L	ASTM A182, F317L	Forged 317L Stainless Steel
F11	ASTM A182, F11	Forged Alloy Steel (1.25% Chrome, .5% Moly)
F22	ASTM A182, F22	Forged Alloy Steel (2.25% Chrome, 1% Moly)
F9	ASTM A182, F9	Forged Alloy Steel (9% Chrome, 1% Moly)
F91	ASTM A182, F91	Forged Alloy Steel (9% Chrome, 1% Moly, V)
F8	ASTM A182, F304	Forged 304 Stainless Steel
F8M	ASTM A182, F316	Forged 316 Stainless Steel
F8C	ASTM A182, F321	Forged 321 Stainless Steel
IB	ASTM A126, CLB	Cast Iron
LCC	ASTM A352, LCC	Cast Low Temperature Carbon Steel
LF2	ASTM A350, LF2	Forged Low Temperature Carbon Steel
MO	ASTM A414, M35	Cast NI Cu (Monel***)
SPL	Special (Customer to specify)	

Pressure Class

1 = 150
2 = 125
3 = 300
6 = 600
8 = 800
9 = 900
15 = 1500
16 = 1690
25 = 2500
26 = 2680
45 = 4500

End Connections

F = Flanged
J = RTJ
S = Socket Weld
T = Threaded
W = Butt Weld
X = Threaded x Socket Weld

Trim Material / API Trim =

		API Trim
1	CR13	1, 4, 8A
2	CR13/HF**	8
3	CR13/FHF**	5
4	316	10
4/2	316/HF**	12
4/3	316/FHF**	16
5	NI Cu (Monel***)	9
5/2	Monel/HF**	11
6	Alloy 20	13
7	Bronze	N/A
A7	Aluminum Bronze	N/A
8	Iron	N/A
9	Special (Customer to Specify)	

Suffix Letters

BP = By Pass
BS = Bellows Seal
CL = Chlorine Service
CR = Cryogenic Service
CW = Chain Wheel
EB = Extended Body
FP = Full Port
FS = Fire Safe
GI = Grease Injection
GO = Gear Operated
HB = Horizontal Ball Check
HP = Horizontal Piston Check
HO = Hydraulic Operator
INT = Integral Flanged
LD = Locking Device
LL = Locking Loop
LV = Live Load Packing
MO = Motor Operated
NC = NACE MR0103 Compliant
OL = Outside Weight & Lever
OX = Oxygen Service
PO = Pneumatic Operator
PS = Pressure Seal Bonnet
PT = PTFE Seats
QS = QuadroSphere
RP = Regular Port
SC = Stop Check
SL = Spring Loading
SPL = Special (Customer to specify)
TD = Tilting Disc Check
TF = Teflon* Insert
TM = Trunnion Mounted
VP = Vertical Ball Check
VL = Vertical Lift Check
VP = V-Port Disc
VT = Viton* Insert
WB = Welded Bonnet
Y = Y Pattern
* = Viton and Teflon are registered trademarks of DuPont Company
**HF= Hardfaced - AWS 5.13 Class C_oC_RA
*** = Monel is a registered trademark of International Nickel Company

Forged Steel Bolted & Welded Bonnet Gates Threaded, Socket Weld & Buttweld Ends Conventional Port

Class 800 thru 2500
Sizes: 1/4" thru 3"

Design and Manufacturing Standards

Valve Design: *API 602*
Pipe Threads, General Purpose, Inch: *ASME B1.20.1*
Socket Welding & Threaded: *ASME B16.11*
Tested in Accordance with: *API 598*
Recommended Spare Parts*

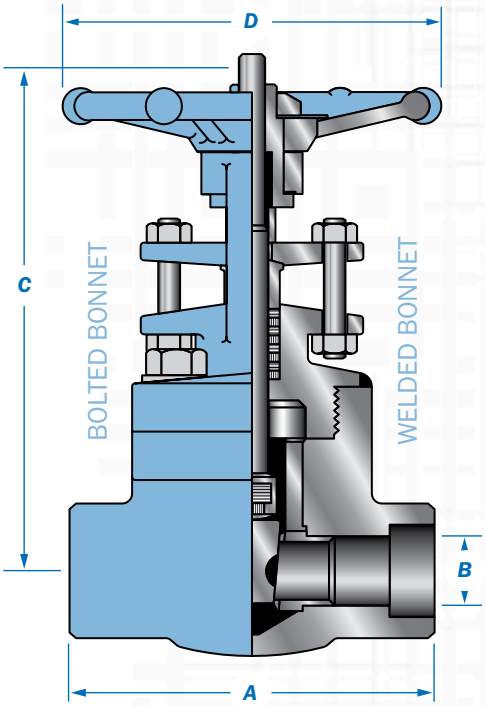

Class 800 thru 2500 Bolted & Welded Bonnet Gates

Size in. / mm	Class 800 WB A 41	Class 800 WB A 45	Class 800 WB B 41	Class 800 WB B 45	Class 800 WB C 41	Class 800 WB C 45	Class 800 WB D 41	Class 800 WB D 45	Class 800 WB Wt. 41	Class 800 WB Wt. 45	Class 800 BB A 41	Class 800 BB A 45	Class 800 BB B 41	Class 800 BB B 45	Class 800 BB C 41	Class 800 BB C 45	Class 800 BB D 41	Class 800 BB D 45	Class 800 BB Wt. 41	Class 800 BB Wt. 45
1/4	3.1		0.31		5.7		3.1		3.5		3.1		0.31		5.7		3.1		3.9	
6	80		8		145		80		1.6		80		8		145		80		1.8	
3/8	3.1		0.39		5.7		3.1		3.5		3.1		0.39		5.7		3.1		3.9	
9	80		10		145		80		1.6		80		10		145		80		1.8	
1/2	3.2	3.1	0.39	0.39	5.2	4.9	3.2	3.3	3.2	3.1	3.2	3.1	0.39	0.39	5.2	4.9	3.2	3.3	3.9	3.1
15	80	78.7	10	10	145	124.5	80	83.8	1.6	1.4	80	78.7	10	10	145	124.5	80	83.8	1.8	1.4
3/4	3.5	3.6	0.55	0.55	5.4	5.2	3.2	3.3	4.4	3.7	3.5	3.6	0.55	0.55	5.4	5.2	3.2	3.3	4.6	3.7
20	90	91.4	14	14	155	132.1	80	83.8	2	1.7	90	91.4	14	14	155	132.1	80	83.8	2.1	1.7
1	4.3	4.4	0.71	0.71	6.3	6.7	3.9	4.7	7.1	6.6	4.3	4.4	0.71	0.71	6.3	6.7	3.9	4.7	7.9	6.6
25	110	111.8	18	18	185	170.2	100	119.4	3.2	3	110	111.8	18	18	185	170.2	100	119.4	3.6	3
1-1/4	5.0	4.7	0.95	0.95	7.4	7.6	4.7	5.9	10.7	11	5.0	4.7	0.95	0.95	7.4	7.6	4.7	5.9	11.2	11
32	127	119.4	24	24	218	193	120	149.9	4.8	5	127	119.4	24	24	218	193	120	149.9	5.3	5
1-1/2	5.0	4.7	1.22	1.22	8.4	8.3	5.5	5.9	14.3	12.3	5.0	4.7	1.22	1.22	8.4	8.3	5.5	5.9	15.4	12.3
40	127	119.4	30	30	255	210.8	140	149.9	6.5	5.6	127	119.4	30	30	255	210.8	140	149.9	7.5	5.6
2	5.1	5.5	1.44	1.44	8.9	9.3	5.5	6.7	18.7	20.3	5.1	5.5	1.44	1.44	8.9	9.3	5.5	6.7	20.0	20.3
50	130	139.7	36.5	36.5	277	236.2	140	170.2	8.5	9.2	130	139.7	36.5	36.5	277	236.2	140	170.2	9.8	9.2
3	-		-		-		-		-		7.3		2.13		15.5		11.3		56	
75	-		-		-		-		-		184.2		53.98		393.7		285.8		25.5	

Size in. / mm	Class 1500 WB A 41	Class 1500 WB A 45	Class 1500 WB B 41	Class 1500 WB B 45	Class 1500 WB C 41	Class 1500 WB C 45	Class 1500 WB D 41	Class 1500 WB D 45	Class 1500 WB Wt. 41	Class 1500 WB Wt. 45	Class 1500 BB A 41	Class 1500 BB A 45	Class 1500 BB B 41	Class 1500 BB B 45	Class 1500 BB C 41	Class 1500 BB C 45	Class 1500 BB D 41	Class 1500 BB D 45	Class 1500 BB Wt. 41	Class 1500 BB Wt. 45
1/2	3.5	4.4	0.39	0.55	5.4	7.8	3.2	4.9	5.0	9	3.5	4.4	0.39	0.55	5.4	7.8	3.2	4.9	5.5	9
15	90	111.8	10	13.97	152	198.1	80	124.5	2.2	4.1	90	111.8	10	139.7	152	198.1	80	124.5	2.5	4.1
3/4	4.3	4.4	0.55	0.55	6.4	7.8	3.9	4.9	8.4	9.5	4.3	4.4	0.55	0.55	6.4	7.8	3.9	4.9	8.4	9.5
20	110	111.8	14	13.97	180	198.1	100	124.5	3.6	4.3	110	111.8	14	139.7	180	198.1	100	124.5	3.8	4.3
1	4.7	4.5	0.75	0.71	7.5	8.6	4.7	6.2	12.6	13.5	4.7	4.5	0.75	0.71	7.5	8.6	4.7	6.2	11.9	13.5
25	120	114.3	18	18.03	218	218.4	120	157.5	5.2	6.1	120	114.3	18	18.03	218	218.4	120	157.5	5.4	6.1
1-1/4	5.1	4.7	0.95	0.95	8.3	9.3	5.5	6.2	14.6	19.2	5.1	4.7	0.95	0.95	8.3	9.3	5.5	6.2	17.6	19.2
32	130	119.4	24	24.13	250	236.2	140	157.5	7.5	8.7	130	119.4	24	24.13	252	236.2	140	157.5	8	8.7
1-1/2	5.1	5.5	1.16	1.14	9	10.8	5.5	7	22.0	26.9	5.1	5.5	1.16	1.14	9	10.8	5.5	7	22.4	26.9
40	130	139.7	29	28.95	275	274.3	140	177.8	10	12.2	130	139.7	29	28.95	275	274.3	170	177.8	10	12.2
2	5.9	6.4	1.44	1.44	10.2	12.6	6.7	7.9	33.0	39	5.9	6.4	1.44	1.44	10.2	12.6	6.7	7.9	33.0	39
50	150	162.6	36.5	36.57	320	320.0	170	200.7	14.5	17.7	150	162.6	37	36.57	320	320.0	170	200.7	15	17.7

Size in. / mm	Class 2500 WB A 41	Class 2500 WB A 45	Class 2500 WB B 41	Class 2500 WB B 45	Class 2500 WB C 41	Class 2500 WB C 45	Class 2500 WB D 41	Class 2500 WB D 45	Class 2500 WB Wt. 41	Class 2500 WB Wt. 45	Class 2500 BB A 41	Class 2500 BB A 45	Class 2500 BB B 41	Class 2500 BB B 45	Class 2500 BB C 41	Class 2500 BB C 45	Class 2500 BB D 41	Class 2500 BB D 45	Class 2500 BB Wt. 41	Class 2500 BB Wt. 45
1/2	4.3	5.9	0.39	0.39	6.9	9.5	3.9	6.3	7.7	27.1	4.3	5.9	0.39	0.39	8.3	9.5	3.9	6.3	12.1	27.1
15	110	149.9	10	9.9	175	241.3	100	160	3.5	12.3	110	149.9	9.9	9.9	210	241.3	100	160	5.5	12.3
3/4	4.7	5.9	0.55	0.55	8.3	9.5	4.7	6.3	12.1	26.6	4.7	5.9	0.55	0.55	10.0	9.5	4.7	6.3	18.7	26.6
20	120	149.9	14	13.97	210	241.3	120	160	5.5	12.1	120	149.9	13.97	13.97	255	241.3	120	160	8.5	12.1
1	5.1	6.7	0.75	0.71	9.4	10.8	5.5	7.1	16.5	26	5.1	6.7	0.75	0.71	10.4	10.8	5.5	7.1	22.4	26
25	130	170.2	18	18.03	240	274.3	140	180.3	7.5	11.8	130	170.2	19.05	18.03	265	274.3	140	180.3	10.2	11.8
1-1/4	5.1	8.7	0.95	0.95	11.0	13.1	6.7	7.8	22	46	8.3	8.7	0.95	0.95	14.4	13.1	6.7	7.8	57.2	46
32	130	220.9	24	24.13	280	332.7	170	198.1	10	20.9	210	220.9	24.13	24.13	365	332.7	170	198.1	26	20.9
1-1/2	8.3	8.7	1.16	1.14	12.2	13.1	6.7	7.8	35.2	60.5	8.3	8.7	1.16	1.14	14.8	13.1	6.7	7.8	57.2	60.5
40	210	220.9	29	28.95	310	332.7	170	198.1	16	27.5	210	220.9	29.46	28.95	375	332.7	170	198.1	26	27.5
2	9.4	9.8	1.44	1.44	14	16.8	10.2	11.8	55	117.3	9.4	9.8	1.44	1.44	15.4	16.8	10.2	11.8	81.4	117.3
50	240	248.9	36.5	36.57	355	426.7	260	299.7	25	53.3	240	248.9	36.57	36.57	390	426.7	260	299.7	37	53.3

Typical Bill of Materials *(See page 12 for available materials.)*

Component	Material	ASTM Spec	Component	Material	ASTM Spec
Body	*Carbon Steel*	*A105N*	**Handwheel Nut**	*Carbon Steel*	*Commercial*
Bonnet	*Carbon Steel*	*A105N*	**Nameplate**	*Aluminum*	*Commercial*
*** Packing**	*Graphite W/Braided Carbon Fiber End Rings*		**Handwheel**	*Carbon Steel*	*A105N*
*** Gasket**	*Stainless Steel 316 Graphite*		**Yoke Sleeve**	*Stainless Steel*	*AISI 416*
Stem	*Stainless Steel*	*A479-410*	**Gland Nuts**	*Carbon Steel*	*A194 2H*
Wedge	*Stainless Steel*	*13 Chrome*	**Gland Flange**	*Carbon Steel*	*A105N*
Seat Rings	*Stainless Steel*	*A479-410*	**Gland Studs**	*Stainless Steel*	*AISI 410*
Bonnet Bolt	*Alloy Steel*	*A193 B7*	**Packing Gland**	*Stainless Steel*	*A479-316*

Note: *Dimensions: Inches/Millimeters - Weights: Pounds/Kilograms. Dimensions are subject to change without notice.*