Newmans®

*The Reliable Source*

# NEWCO - Forged Steel Valves

**Gates • Globes • Swing Checks • Lift Checks**

## *Product Line Technical Data*


***Corporate Headquarters***
***Houston, Texas***
*1300 Gazin St.*
*Houston, TX 77020*
*Tel: 713.675.8631*
*Fax: 713.675.1589*
***Toll Free: 800.231.3505***
***www.NewmansValve.com***


*Manufacturer of*

Newco® COOPER® OIC® QuadroSphere®

# Pressure Temperature Ratings - ASME B16.34 - 2004 (standard)

| | °F / PSI | -20 to 100 | 200 | 300 | 400 | 500 | 600 | 650 | 700 | 750 | 800 | 850 | 900 | 950 | 1000 | 1050 | 1100 | 1150 | 1200 |
|---|---|---|---|---|---|---|---|---|---|---|---|---|---|---|---|---|---|---|---|
| Class 150 | A105* | 285 | 260 | 230 | 200 | 170 | 140 | 125 | 110 | 95 | 80 | 65 | 50 | 35 | 20 | - | - | - | - |
| | LF2* | 290 | 260 | 230 | 200 | 170 | 140 | 125 | 110 | 95 | 80 | 65 | 50 | 35 | 20 | - | - | - | - |
| | F11+ | 290 | 260 | 230 | 200 | 170 | 140 | 125 | 110 | 95 | 80 | 65 | 50 | 35 | 20 | 20** | 20** | - | - |
| | F22+ | 290 | 260 | 230 | 200 | 170 | 140 | 125 | 110 | 95 | 80 | 65 | 50 | 35 | 20 | 20** | 20** | - | - |
| | F5 | 290 | 260 | 230 | 200 | 170 | 140 | 125 | 110 | 95 | 80 | 65 | 50 | 35 | 20 | 20** | 20** | 20** | 20** |
| | F9 | 290 | 260 | 230 | 200 | 170 | 140 | 125 | 110 | 95 | 80 | 65 | 50 | 35 | 20 | 20** | 20** | 20** | 20** |
| | F91 | 290 | 260 | 230 | 200 | 170 | 140 | 125 | 110 | 95 | 80 | 65 | 50 | 35 | 20 | 20 | 20 | 20 | 20 |
| Class 300 | A105* | 740 | 680 | 655 | 635 | 605 | 570 | 550 | 530 | 505 | 410 | 320 | 230 | 135 | 85 | - | - | - | - |
| | LF2* | 740 | 680 | 655 | 635 | 605 | 570 | 550 | 530 | 505 | 410 | 320 | 230 | 135 | 85 | - | - | - | - |
| | F11+ | 750 | 750 | 720 | 695 | 665 | 605 | 590 | 570 | 530 | 510 | 485 | 450 | 320 | 215 | 145 | 95 | 65 | 40 |
| | F22+ | 750 | 750 | 730 | 705 | 665 | 605 | 590 | 570 | 530 | 500 | 485 | 450 | 385 | 265 | 175 | 110 | 70 | 40 |
| | F5 | 750 | 750 | 730 | 705 | 665 | 605 | 590 | 570 | 530 | 510 | 485 | 375 | 275 | 200 | 145 | 100 | 60 | 35 |
| | F9 | 750 | 750 | 730 | 705 | 665 | 605 | 590 | 570 | 530 | 510 | 4185 | 450 | 375 | 255 | 170 | 115 | 75 | 50 |
| | F91 | 750 | 750 | 730 | 705 | 665 | 605 | 590 | 570 | 530 | 510 | 485 | 450 | 385 | 365 | 360 | 300 | 225 | 145 |
| Class 600 | A105* | 1480 | 1360 | 1310 | 1265 | 1205 | 1135 | 1100 | 1060 | 1015 | 825 | 640 | 460 | 275 | 170 | - | - | - | - |
| | LF2* | 1480 | 1360 | 1310 | 1265 | 1205 | 1135 | 1100 | 1060 | 1015 | 825 | 640 | 460 | 275 | 170 | - | - | - | - |
| | F11+ | 1500 | 1500 | 1445 | 1385 | 1330 | 1210 | 1175 | 1135 | 1065 | 1015 | 975 | 900 | 640 | 430 | 290 | 190 | 130 | 80 |
| | F22+ | 1500 | 1500 | 1455 | 1410 | 1330 | 1210 | 1175 | 1135 | 1065 | 1015 | 975 | 900 | 755 | 535 | 350 | 220 | 135 | 80 |
| | F5 | 1500 | 1470 | 1400 | 1335 | 1290 | 1210 | 1175 | 1135 | 1065 | 1015 | 975 | 745 | 550 | 400 | 290 | 190 | 125 | 70 |
| | F9 | 1500 | 1500 | 1455 | 1410 | 1330 | 1210 | 1175 | 1135 | 1065 | 1015 | 975 | 900 | 755 | 505 | 345 | 225 | 150 | 105 |
| | F91 | 1500 | 1500 | 1455 | 1410 | 1330 | 1210 | 1175 | 1135 | 1065 | 1015 | 975 | 900 | 775 | 725 | 720 | 605 | 445 | 290 |
| Class 800 | A105* | 1974 | 1810 | 1747 | 1689 | 1609 | 1515 | 1467 | 1414 | 1352 | 1098 | 850 | 613 | 365 | 227 | - | - | - | - |
| | LF2* | 1974 | 1810 | 1747 | 1689 | 1609 | 1515 | 1467 | 1414 | 1352 | 1098 | 850 | 613 | 365 | 227 | - | - | - | - |
| | F11+ | 2000 | 2000 | 1925 | 1849 | 1774 | 1614 | 1569 | 1515 | 1419 | 1355 | 1298 | 1200 | 850 | 577 | 383 | 257 | 173 | 110 |
| | F22+ | 2000 | 2000 | 1942 | 1880 | 1774 | 1614 | 1569 | 1515 | 1419 | 1355 | 1298 | 1200 | 1025 | 712 | 467 | 293 | 182 | 110 |
| | F5 | 2000 | 1964 | 1876 | 1782 | 1724 | 1614 | 1569 | 1515 | 1419 | 1355 | 1298 | 995 | 733 | 530 | 383 | 257 | 165 | 93 |
| | F9 | 2000 | 2000 | 1942 | 1880 | 1774 | 1614 | 1569 | 1515 | 1419 | 1355 | 1298 | 1200 | 1005 | 675 | 458 | 302 | 200 | 138 |
| | F91 | 2000 | 2000 | 1942 | 1880 | 1774 | 1614 | 1569 | 1515 | 1419 | 1355 | 1298 | 1200 | 1032 | 968 | 960 | 805 | 595 | 383 |
| Class 900 | A105* | 2220 | 2035 | 1965 | 1900 | 1810 | 1705 | 1650 | 1590 | 1520 | 1235 | 955 | 690 | 410 | 255 | - | - | - | - |
| | LF2* | 2220 | 2035 | 1965 | 1900 | 1810 | 1705 | 1650 | 1590 | 1520 | 1235 | 955 | 690 | 410 | 255 | - | - | - | - |
| | F11+ | 2250 | 2250 | 2165 | 2080 | 1995 | 1815 | 1765 | 1705 | 1595 | 1525 | 1460 | 1350 | 955 | 650 | 430 | 290 | 195 | 125 |
| | F22+ | 2250 | 2250 | 2185 | 2115 | 1995 | 1815 | 1765 | 1705 | 1595 | 1525 | 1460 | 1350 | 1160 | 800 | 525 | 330 | 205 | 125 |
| | F5 | 2250 | 2210 | 2100 | 2005 | 1940 | 1815 | 1765 | 1705 | 1595 | 1525 | 1460 | 1120 | 825 | 595 | 430 | 290 | 185 | 105 |
| | F9 | 2250 | 2250 | 2185 | 2115 | 1995 | 1815 | 1765 | 1705 | 1595 | 1525 | 1460 | 1350 | 1130 | 760 | 515 | 340 | 225 | 155 |
| | F91 | 2250 | 2250 | 2185 | 2115 | 1995 | 1815 | 1765 | 1705 | 1595 | 1525 | 1460 | 1350 | 1160 | 1090 | 1080 | 905 | 670 | 430 |
| Class 1500 | A105* | 3705 | 3395 | 3270 | 3170 | 3015 | 2840 | 2745 | 2665 | 2535 | 2055 | 1595 | 1150 | 685 | 430 | - | - | - | - |
| | LF2* | 3705 | 3395 | 3270 | 3170 | 3015 | 2840 | 2745 | 2665 | 2535 | 2055 | 1595 | 1150 | 685 | 430 | - | - | - | - |
| | F11+ | 3750 | 3750 | 3610 | 3465 | 3325 | 3025 | 2940 | 2840 | 2660 | 2540 | 2435 | 2245 | 1595 | 1080 | 720 | 480 | 325 | 205 |
| | F22+ | 3750 | 3750 | 3640 | 3530 | 3325 | 3025 | 2940 | 2840 | 2660 | 2540 | 2435 | 2245 | 1930 | 1335 | 875 | 550 | 345 | 205 |
| | F5 | 3750 | 3680 | 3495 | 3345 | 3230 | 3025 | 2940 | 2840 | 2660 | 2540 | 2435 | 1870 | 1370 | 995 | 720 | 480 | 310 | 170 |
| | F9 | 3750 | 3750 | 3640 | 3530 | 3325 | 3025 | 2940 | 2840 | 2660 | 2540 | 2435 | 2245 | 1885 | 1270 | 855 | 565 | 375 | 255 |
| | F91 | 3750 | 3750 | 3640 | 3530 | 3325 | 3025 | 2940 | 2840 | 2660 | 2540 | 2435 | 2245 | 1930 | 1820 | 1800 | 1510 | 1115 | 720 |
| Class 1690 | A105* | 4173 | 3824 | 3684 | 3571 | 3397 | 3199 | 3093 | 2999 | 2857 | 2316 | 1796 | 1295 | 772 | 484 | - | - | - | - |
| | LF2* | 4173 | 3824 | 3684 | 3571 | 3397 | 3199 | 3093 | 2999 | 2857 | 2316 | 1796 | 1295 | 772 | 484 | - | - | - | - |
| | F11+ | 4225 | 4225 | 4067 | 3904 | 3746 | 3408 | 3313 | 3199 | 2996 | 2861 | 2744 | 2530 | 1796 | 1217 | 811 | 541 | 367 | 232 |
| | F22+ | 4225 | 4225 | 4102 | 3977 | 3746 | 3408 | 3313 | 3199 | 2996 | 2861 | 2744 | 2530 | 2175 | 1505 | 985 | 619 | 388 | 232 |
| | F5 | 4225 | 4146 | 3939 | 3768 | 3639 | 3408 | 3313 | 3199 | 2996 | 2861 | 2744 | 2107 | 1544 | 1120 | 811 | 541 | 349 | 192 |
| | F9 | 4225 | 4225 | 4102 | 3977 | 3746 | 3408 | 3313 | 3199 | 2996 | 2861 | 2744 | 2530 | 2124 | 1431 | 964 | 637 | 423 | 288 |
| | F91 | 4225 | 4225 | 4102 | 3977 | 3746 | 3408 | 3313 | 3199 | 2996 | 2861 | 2744 | 2530 | 2175 | 2050 | 2028 | 1701 | 1256 | 811 |
| Class 2500 | A105* | 6170 | 5655 | 5450 | 5280 | 5025 | 4730 | 4575 | 4425 | 4230 | 3430 | 2655 | 1915 | 1145 | 715 | - | - | - | - |
| | LF2* | 6170 | 5655 | 5450 | 5280 | 5025 | 4730 | 4575 | 4425 | 4230 | 3430 | 2655 | 1915 | 1145 | 715 | - | - | - | - |
| | F11+ | 6250 | 6250 | 6015 | 5775 | 5540 | 5040 | 5905 | 4730 | 4430 | 4230 | 4060 | 3745 | 2655 | 1800 | 1200 | 800 | 545 | 345 |
| | F22+ | 6250 | 6250 | 6070 | 5880 | 5540 | 5040 | 4905 | 4730 | 4430 | 4230 | 4060 | 3745 | 3220 | 2230 | 1455 | 915 | 570 | 345 |
| | F5 | 6250 | 6135 | 5830 | 5570 | 5385 | 5040 | 4905 | 4730 | 4430 | 4230 | 4060 | 3115 | 2285 | 1655 | 1200 | 800 | 515 | 285 |
| | F9 | 6250 | 6250 | 6070 | 5880 | 5540 | 5040 | 4905 | 4730 | 4430 | 4230 | 4060 | 3745 | 3145 | 2115 | 1430 | 945 | 630 | 430 |
| | F91 | 6250 | 6250 | 6070 | 5880 | 5540 | 5040 | 4905 | 4730 | 4430 | 4230 | 4060 | 3745 | 3220 | 3030 | 3000 | 2515 | 1855 | 1200 |
| Class 2680 | A105* | 6615 | 6063 | 5843 | 5660 | 5386 | 5071 | 4905 | 4743 | 4534 | 3677 | 2847 | 2054 | 1227 | 766 | - | - | - | - |
| | LF2* | 6615 | 6063 | 5843 | 5660 | 5386 | 5071 | 4905 | 4743 | 4534 | 3677 | 2847 | 2054 | 1227 | 766 | - | - | - | - |
| | F11+ | 6700 | 6700 | 6448 | 6191 | 5938 | 5403 | 5258 | 5071 | 4749 | 4534 | 4352 | 4015 | 2847 | 1930 | 1286 | 858 | 584 | 369 |
| | F22+ | 6700 | 6700 | 6507 | 6303 | 5938 | 5403 | 5258 | 5071 | 4749 | 4534 | 4352 | 4015 | 3452 | 2390 | 1560 | 981 | 611 | 369 |
| | F5 | 6700 | 6576 | 6249 | 5971 | 5772 | 5403 | 5258 | 5071 | 4749 | 4534 | 4352 | 3339 | 2450 | 1775 | 1286 | 858 | 552 | 306 |
| | F9 | 6700 | 6700 | 6507 | 6303 | 5938 | 5403 | 5258 | 5071 | 4749 | 4534 | 4352 | 4015 | 3371 | 2267 | 1533 | 1013 | 675 | 461 |
| | F91 | 6700 | 6700 | 6507 | 6303 | 5938 | 5403 | 5258 | 5071 | 4749 | 4534 | 4352 | 4015 | 3452 | 3248 | 3216 | 2696 | 1989 | 1286 |
| Class 4500 | A105* | 11110 | 10185 | 9815 | 9505 | 9040 | 8515 | 8240 | 7960 | 7610 | 6170 | 4785 | 3455 | 2055 | 1285 | - | - | - | - |
| | LF2* | 11110 | 10185 | 9815 | 9505 | 9040 | 8515 | 8240 | 7960 | 7610 | 6170 | 4785 | 3455 | 2055 | 1285 | - | - | - | - |
| | F11+ | 11250 | 11250 | 10830 | 10400 | 9965 | 9070 | 8825 | 8515 | 7970 | 7610 | 7305 | 6740 | 4785 | 3240 | 2160 | 1440 | 975 | 615 |
| | F22+ | 11250 | 11250 | 10925 | 10585 | 9965 | 9070 | 8825 | 8515 | 7970 | 7610 | 7305 | 6740 | 5795 | 4010 | 2625 | 1645 | 1030 | 615 |
| | F5 | 11250 | 11040 | 10490 | 10030 | 9690 | 9070 | 8825 | 8515 | 7970 | 7610 | 7305 | 5605 | 4115 | 2985 | 2160 | 1440 | 925 | 515 |
| | F9 | 11250 | 11250 | 10925 | 10585 | 9965 | 9070 | 8825 | 8515 | 7970 | 7610 | 7305 | 6740 | 5655 | 3805 | 2570 | 1695 | 1130 | 770 |
| | F91 | 11250 | 11250 | 10925 | 10586 | 9965 | 9070 | 8825 | 8515 | 7970 | 7610 | 7305 | 6740 | 5795 | 5450 | 5400 | 4525 | 3345 | 2160 |

** Not recommended for prolonged use above 800° F. + Not recommended for prolonged use above 1100° F. ** For weld end valves only. Flanged end ratings terminate at 1000° F.*
***Note:** Packing, gasket, or bolting may limit temperature. Please advise service temperature if above 1000° F. Ratings from ASME B16.34 standard class valves. Special class weld end valves to ASME B16.34 are available on special order.*

# Valve & I.D. Tag Overview

*The identification tag displays all construction and tracking data regarding the respective valve on which it is attached. Below is a general overview of the identification tag components.*

*I.D. Tags are located under the handwheel nut.*

*Globe and Check Valves will have a flow direction arrow on body for proper installation.*

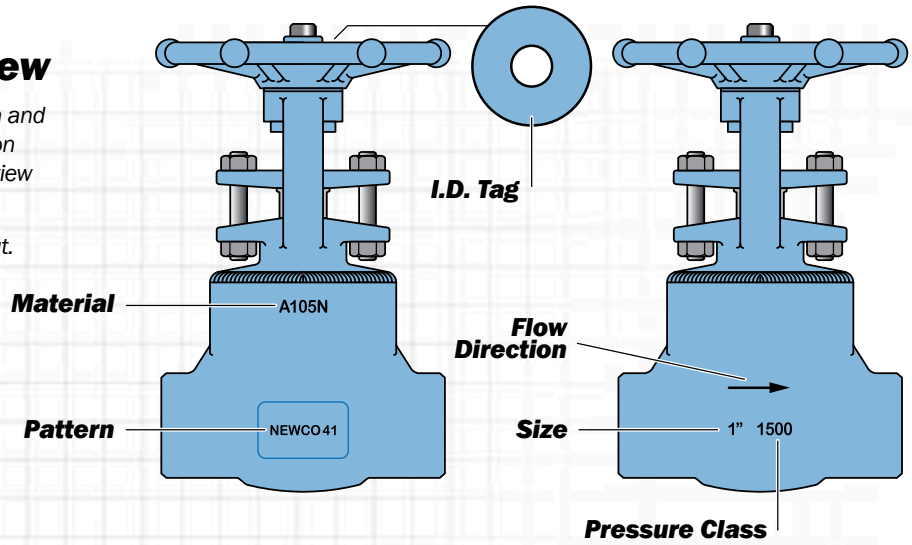


## NEWCO 41 I.D. Tag

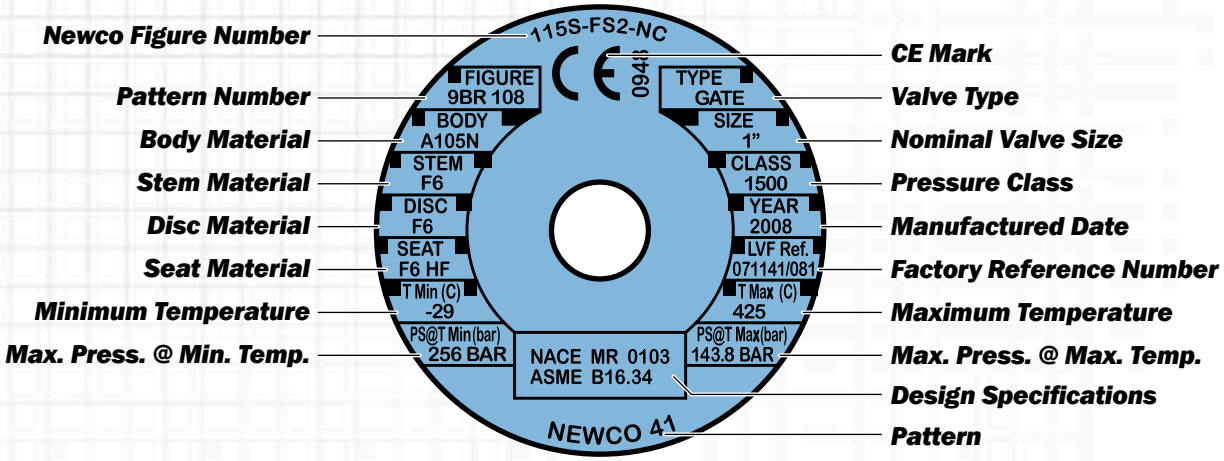


## NEWCO 45 I.D. Tag

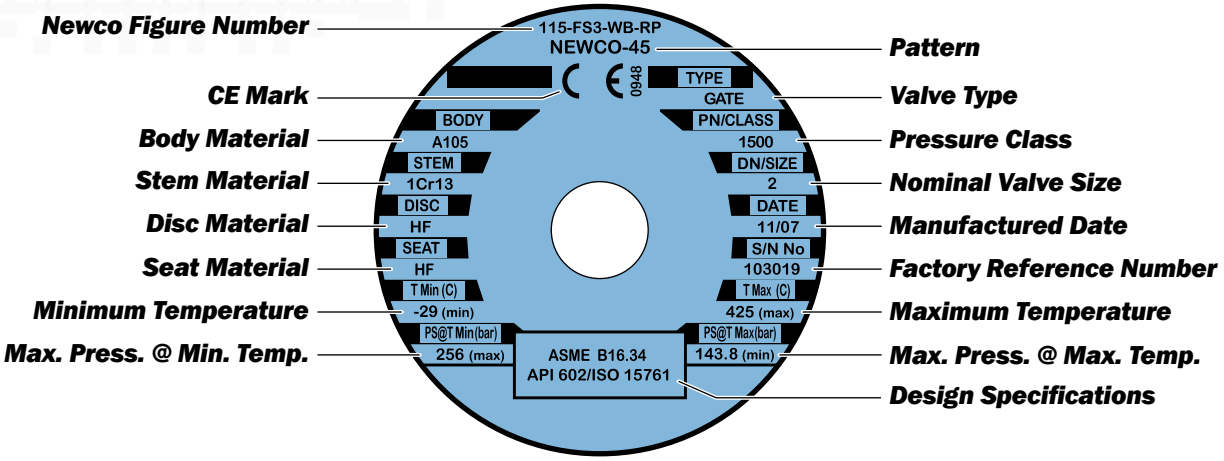

# Body/Bonnet Materials

*Newco forged steel valves are available in stock in a wide range of body/bonnet materials and optional trim materials. Listed below are some of the more popular materials. Additional materials are available. Please contact Newmans or your local distributor for details.*

| Newco Material Designation | Common Description | ASTM Specs. | Body/Bonnet Material Service Limitations* |
|---|---|---|---|
| FS | Carbon Steel | A105 | Non-corrosive service water, oil, & gases at temperatures between -20° F & +800° F |
| LF2 | Low Temp Carbon | A350 | Low temperature service between -50° F & +800° F |
| F11 | 1.25% Chrome & .5% Moly | A182 | Non-corrosive service water, oil, & gases at temperatures between -20° F & +1100° F |
| F22 | 2.25% Chrome & 1% Moly | A182 | Non-corrosive service water, oil, & gases at temperatures between -20° F & +1100° F |
| F5 | 5% Chrome & .5% Moly | A182 | Corrosive, non-corrosive, or erosive service at temperatures between -20° F & +1200° F |
| F9 | 9% Chrome & 1% Moly | A182 | Corrosive, non-corrosive, or erosive service at temperatures between -20° F & +1200° F |
| F91 | 9% Chrome, 1% Moly, & V | A182 | Corrosive, non-corrosive, or erosive service at temperatures between -20° F & +1200° F |
| F316 | 316 | A182 | Corrosive, cryogenic or high temperature service between -450° F & +1200° F |

** Limitations are per 2004 Edition of ASME B16.34.*

# Trim Materials

*The following are Newco's standard trim designations.*

| Newco Trim Number | Common Name | API 600 Trim No. | Seat Ring Facing (1) | Wedge or Disc Facing (1) | Stem | Other Trim Parts (2) | Service Limitations |
|---|---|---|---|---|---|---|---|
| 1 | 13 Chrome | 1 | CR 13 | CR 13 | CR 13 | CR 13 | Non-corrosive applications. Steam, gas, & general service to 700° F. Oil & oil vapor to 900° F |
| 2 | Half Stellite | 8 | HF | CR 13 | CR 13 | CR 13 | Steam, gas, & general service to 1000° F. Standard trim for gate valves |
| 3 | Full Stellite | 5 | HF | HF | CR 13 | CR 13 | Premium trim service to 1200° F. Excellent for high pressure water and steam service |
| 4 | 316 | 10 | 316 | 316 | 316 | 316 | Corrosive services to 850° F. Low temperature service standard for 316 SS valves |
| 4/2 | 316/Half Stellite | 12 | HF | 316 | 316 | 316 | |
| 4/3 | 316/Full Stellite | 16 | HF | HF | 316 | 316 | |
| 5 | Monel | 9 | NiCu | NiCu | NiCu | NiCu | Corrosive services to 750° F |
| 5/2 | Monel/Half Stellite | 11 | HF | NiCu | NiCu | NiCu | |
| 5/3 | Monel/Full Stellite | - | HF | HF | NiCu | NiCu | |
| 6 | Alloy 20 | 13 | A20 | A20 | A20 | A20 | Corrosive services to 300° F |
| X | Special | Special | Special | Special | Special | Special | Customer to specify |

(1) Facing is defined as the seating surface of a seat ring and wedge/disc
(2) Other trim parts are defined as small internal parts that are normally in contact with the service fluid. This includes the stem, etc. in gate and globe valves and the swing check disc nut

# Newco Features and Benefits

- Material Test Reports
- International Organization for Standardization (ISO)
- Traceability
- Fugitive Emissions Tested
- API-598 Tested
- Major End-user Approved
- Ship from Multiple North American Locations
- Extensive Engineering Capabilities
- Excellent Customer Service
- Warranty
- Field Services for Start-up
- In-house Automation Capabilities

# How to Order All Newco Products

***Note:*** *OIC and Cooper "How to Order" information can be found in their respective catalogs.*

### Figure Number

*The figure number shown below identifies specific valve configuration details of Newco valves such as valve type, pressure class, end connections, body/bonnet & trim materials, and special features.*

*Please specify end connections, body materials, and trims not listed below.*

*When placing an order, please refer to the respective product section of the catalog for size availability. A detailed description must be included with any special orders.*

### Type

1 = Gate, OS&Y
2 = Globe/Globe Stop Check, OS&Y
3 = Swing/Tilting Disc Check
4 = Piston Check
5 = Ball
6 = Gate, NRS
7 = Angle/Angle Stop Check, OS&Y

# Fig. 18T-FS2__

### Body/Bonnet Material

| | | |
|---|---|---|
| A20 | ASTM A351, CN7M | Cast Alloy 20 |
| CB | ASTM A216, WCB | Cast Carbon Steel |
| CC | ASTM A216, WCC | Cast Carbon Steel |
| C5 | ASTM A217, C5 | Cast Alloy Steel (5% Chrome, .5% Moly) |
| C6 | ASTM A217, WC6 | Cast Alloy Steel (1.25% Chrome, .5% Moly) |
| C9 | ASTM A217, WC9 | Cast Alloy Steel (2.25% Chrome, 1% Moly) |
| C12 | ASTM A217, C12 | Cast Alloy Steel (9% Chrome, 1% Moly) |
| 12A | ASTM A217, C12A | Cast Alloy Steel (9% Chrome, 1% Moly, V) |
| CF3 | ASTM A351, CF3 | Cast Stainless Steel |
| C3M | ASTM A351, CF3M | Cast 316L Stainless Steel |
| CF8 | ASTM A351, CF8 | Cast 304 Stainless Steel |
| C7L | ASTM A351, CG3M | Cast 317L Stainless Steel |
| C8M | ASTM A351, CF8M | Cast 316 Stainless Steel |
| C8C | ASTM A351, CF8C | Cast 347 Stainless Steel |
| CT | ASTM A351, CG8M | Cast 317 Stainless Steel |
| DI | ASTM A395 | Cast Ductile Iron |
| FS | ASTM A105 | Forged Carbon Steel |
| F3M | ASTM A182, F316L | Forged 316 Stainless Steel |
| F5 | ASTM A182, F5 | Forged Alloy Steel (5% Chrome, .5% Moly) |
| F7 | ASTM A182, 317 | Forged 317 Stainless Steel |
| F7L | ASTM A182, F317L | Forged 317L Stainless Steel |
| F11 | ASTM A182, F11 | Forged Alloy Steel (1.25% Chrome, .5% Moly) |
| F22 | ASTM A182, F22 | Forged Alloy Steel (2.25% Chrome, 1% Moly) |
| F9 | ASTM A182, F9 | Forged Alloy Steel (9% Chrome, 1% Moly) |
| F91 | ASTM A182, F91 | Forged Alloy Steel (9% Chrome, 1% Moly, V) |
| F8 | ASTM A182, F304 | Forged 304 Stainless Steel |
| F8M | ASTM A182, F316 | Forged 316 Stainless Steel |
| F8C | ASTM A182, F321 | Forged 321 Stainless Steel |
| IB | ASTM A126, CLB | Cast Iron |
| LCC | ASTM A352, LCC | Cast Low Temperature Carbon Steel |
| LF2 | ASTM A350, LF2 | Forged Low Temperature Carbon Steel |
| MO | ASTM A414, M35 | Cast NI Cu (Monel***) |
| SPL | Special (Customer to specify) | |

### Pressure Class

1 = 150
2 = 125
3 = 300
6 = 600
8 = 800
9 = 900
15 = 1500
16 = 1690
25 = 2500
26 = 2680
45 = 4500

### End Connections

F = Flanged
J = RTJ
S = Socket Weld
T = Threaded
W = Butt Weld
X = Threaded x Socket Weld

### Trim Material / API Trim =

| | | |
|---|---|---|
| 1 | CR13 | 1, 4, 8A |
| 2 | CR13/HF** | 8 |
| 3 | CR13/FHF** | 5 |
| 4 | 316 | 10 |
| 4/2 | 316/HF** | 12 |
| 4/3 | 316/FHF** | 16 |
| 5 | NI Cu (Monel***) | 9 |
| 5/2 | Monel/HF** | 11 |
| 6 | Alloy 20 | 13 |
| 7 | Bronze | N/A |
| A7 | Aluminum Bronze | N/A |
| 8 | Iron | N/A |
| 9 | Special (Customer to Specify) | |

### Suffix Letters

BP = By Pass
BS = Bellows Seal
CL = Chlorine Service
CR = Cryogenic Service
CW = Chain Wheel
EB = Extended Body
FP = Full Port
FS = Fire Safe
GI = Grease Injection
GO = Gear Operated
HB = Horizontal Ball Check
HP = Horizontal Piston Check
HO = Hydraulic Operator
INT = Integral Flanged
LD = Locking Device
LL = Locking Loop
LV = Live Load Packing
MO = Motor Operated
NC = NACE MR0103 Compliant
OL = Outside Weight & Lever
OX = Oxygen Service
PO = Pneumatic Operator
PS = Pressure Seal Bonnet
PT = PTFE Seats
QS = QuadroSphere
RP = Regular Port
SC = Stop Check
SL = Spring Loading
SPL = Special (Customer to specify)
TD = Tilting Disc Check
TF = Teflon* Insert
TM = Trunnion Mounted
VP = Vertical Ball Check
VL = Vertical Lift Check
VP = V-Port Disc
VT = Viton* Insert
WB = Welded Bonnet
Y = Y Pattern
* = Viton and Teflon are registered trademarks of DuPont Company
**HF= Hardfaced - AWS 5.13 Class $C_oC_rA$
*** = Monel is a registered trademark of International Nickel Company

# Typical Newco Forged Steel Bolted Check Valve Expanded View

***1. Body:*** *Newco forged steel bodies provide low resistance flow and optimum strength and performance.*

***2. Cover Studs:*** *The cover studs secure the bonnet to the body.*

***3. Cover:*** *The cover allows access to internal components.*

***4. Spring:*** *The spring is precision made and loaded for precise pressures.*

***5. Piston:*** *Newmans piston is machined to the tightest tolerances to ensure trouble free shutoff and cycling.*

***6. Cover Gasket:*** *The cover gasket creates a leak-proof seal between the bonnet and the body.*

***7. Seat:*** *The seat ensures a stable shutoff. The seat is precision ground for optimal seating.*

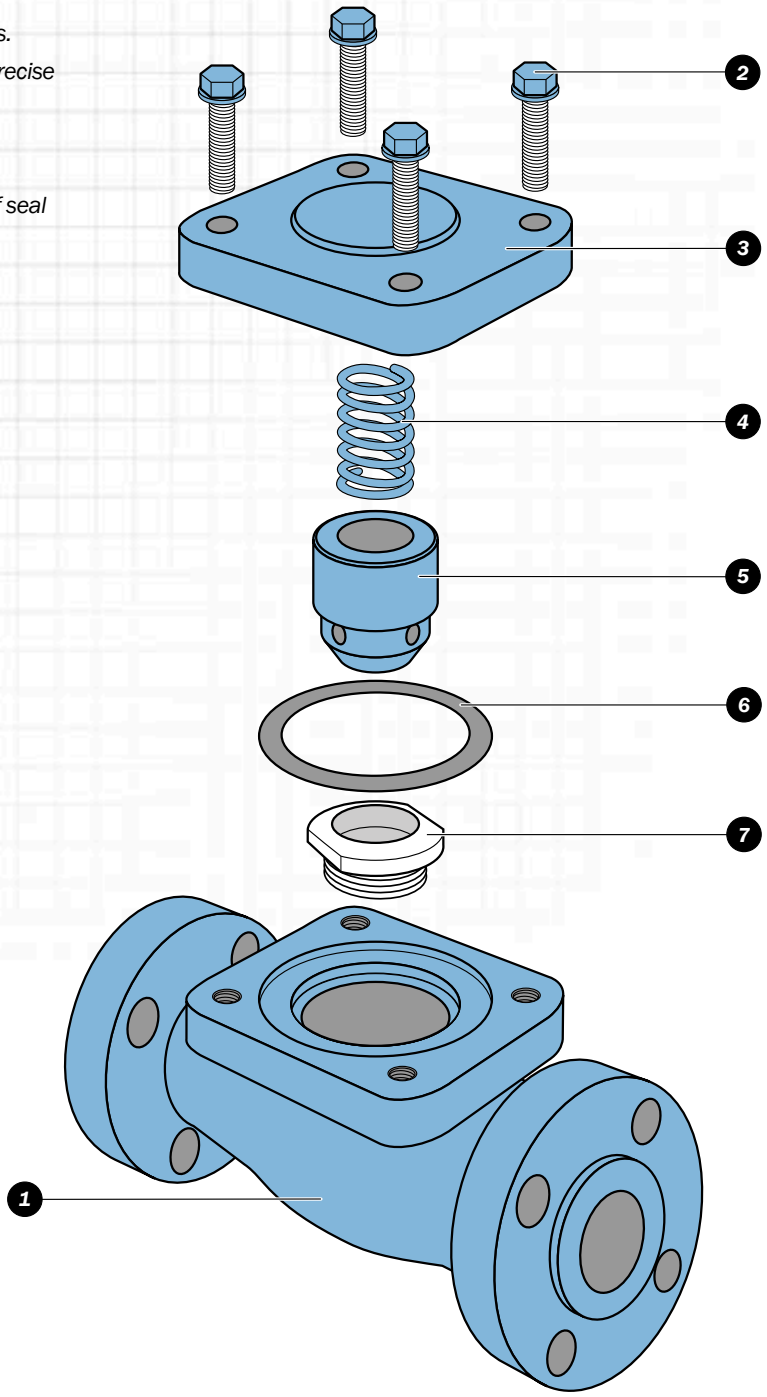

# Forged Steel Lift & Swing Checks
# Bolted & Welded Cover
# Conventional Port
## Class 800 thru 1500
## Sizes: 1/2" thru 2" (1/4" & 3/8" available upon request)

### Design and Manufacturing Standards

| |
|---|
| **Valve Design:** *API 602* |
| **Pipe Threads, General Purpose, Inch:** *ASME B1.20.1* |
| **Socket Welding:** *ASME B16.11* |
| **Tested in Accordance with:** *API 598* |
| **Recommended Spare Parts*** |

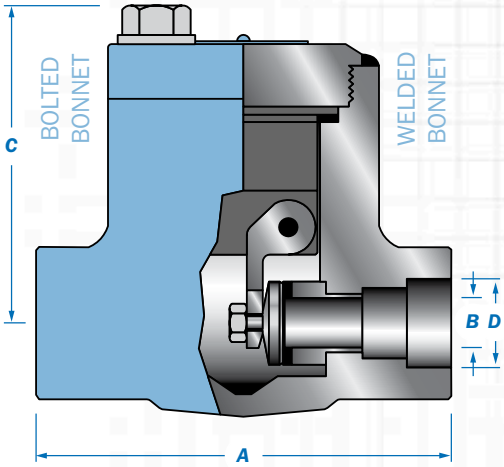


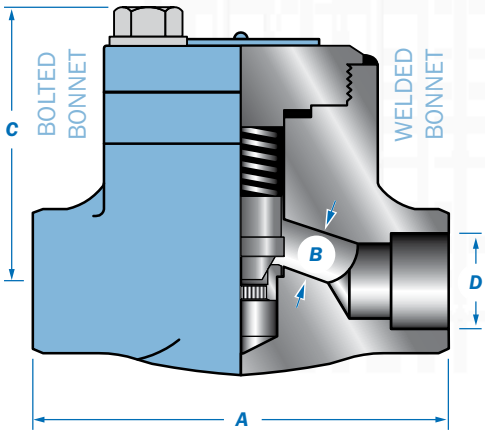


### Class 800 thru 1500
### Bolted & Welded Bonnet Lift & Swing Check

| Size in. / mm | Class 800 BB Lift A | | B | | C | | D | | Wt. | | Class 800 BB Swing A | | B | | C | | D | | Wt. | |
|---|---|---|---|---|---|---|---|---|---|---|---|---|---|---|---|---|---|---|---|---|
| | 41 | 45 | 41 | 45 | 41 | 45 | 41 | 45 | 41 | 45 | 41 | 45 | 41 | 45 | 41 | 45 | 41 | 45 | 41 | 45 |
| 1/2 | 3.2 | 3.1 | 0.35 | 0.39 | 1.9 | 1.9 | 0.4 | 0.9 | 2.4 | 2.1 | 3.2 | 3.1 | 0.35 | 0.39 | 1.9 | 1.6 | 0.4 | 0.85 | 2.4 | 2.1 |
| 15 | 80 | 78.7 | 9 | 9.9 | 49 | 49 | 10 | 24 | 1.1 | 1 | 80 | 78.7 | 9 | 9.9 | 49 | 40.6 | 10 | 21.6 | 1.1 | 1 |
| 3/4 | 3.5 | 3.6 | 0.49 | 0.39 | 2.2 | 2.1 | 0.6 | 1.1 | 4 | 2.6 | 3.5 | 3.6 | 0.49 | 0.55 | 2.2 | 1.8 | 0.6 | 1.07 | 4 | 2.5 |
| 20 | 90 | 91.4 | 12.5 | 9.9 | 55 | 53.3 | 14 | 27.9 | 1.8 | 1.2 | 90 | 91.4 | 12.5 | 13.9 | 55 | 45.7 | 14 | 27.2 | 1.8 | 1.1 |
| 1 | 4.3 | 4.4 | 0.68 | 0.69 | 2.8 | 2.7 | 0.7 | 1.3 | 5.7 | 4.3 | 4.3 | 4.4 | 0.68 | 0.71 | 2.8 | 2.3 | 0.7 | 1.33 | 5.7 | 3.9 |
| 25 | 110 | 111.8 | 17.5 | 17.5 | 70 | 68.6 | 18 | 33 | 2.6 | 2 | 110 | 111.8 | 17.5 | 18 | 70 | 58.4 | 17.8 | 33.8 | 2.6 | 1.8 |
| 1-1/4 | 5 | 4.7 | 0.88 | 0.9 | 3 | 3.3 | 0.9 | 1.7 | 7.9 | 11.5 | 5 | 4.7 | 0.88 | 0.95 | 3 | 3.3 | 0.9 | 1.67 | 7.9 | 10.6 |
| 32 | 127 | 119.4 | 22.5 | 22.9 | 77 | 83.8 | 24 | 43.2 | 3.6 | 5.2 | 127 | 119.4 | 22.5 | 24.1 | 77 | 83.8 | 24 | 42.4 | 3.6 | 4.8 |
| 1-1/2 | 6.1 | 6 | 1.14 | 1.18 | 4.1 | 3.7 | 1.2 | 1.2 | 12.1 | 9.9 | 6.1 | 4.7 | 1.14 | 1.14 | 4.1 | 3.1 | 1.2 | 1.92 | 12.1 | 8.8 |
| 40 | 155 | 152.4 | 29 | 29.9 | 105 | 94 | 29.5 | 30.5 | 5.5 | 4.5 | 130 | 119.4 | 29 | 29 | 105 | 78.7 | 29.5 | 48.8 | 5.5 | 4 |
| 2 | 6.7 | 6.8 | 1.38 | 1.45 | 4.7 | 4.4 | 1.4 | 1.5 | 18.5 | 17 | 5.1 | 5.5 | 1.44 | 1.44 | 4.7 | 3.7 | 2.4 | 2.4 | 19.6 | 13.2 |
| 50 | 170 | 172.7 | 35 | 36.8 | 120 | 111.8 | 36.5 | 38.1 | 8.4 | 7.7 | 130 | 139.7 | 36.6 | 36.6 | 119 | 94 | 61 | 61 | 8.9 | 6 |

| Size in. / mm | Class 800 WB Lift A | | B | | C | | D | | Wt. | | Class 800 WB Swing A | | B | | C | | D | | Wt. | |
|---|---|---|---|---|---|---|---|---|---|---|---|---|---|---|---|---|---|---|---|---|
| | 41 | 45 | 41 | 45 | 41 | 45 | 41 | 45 | 41 | 45 | 41 | 45 | 41 | 45 | 41 | 45 | 41 | 45 | 41 | 45 |
| 1/2 | 3.2 | 3.1 | 0.35 | 0.39 | 1.9 | 1.9 | 0.4 | 0.9 | 2 | 2.1 | 3.2 | 3.1 | 0.35 | 0.39 | 1.9 | 1.6 | 0.4 | 0.85 | 2 | 2.1 |
| 15 | 80 | 78.7 | 9 | 9.9 | 49 | 49 | 10 | 24 | 0.9 | 1 | 80 | 78.7 | 9 | 9.9 | 49 | 40.6 | 10 | 21.6 | 0.9 | 1 |
| 3/4 | 3.5 | 3.6 | 0.49 | 0.39 | 2.2 | 2.1 | 0.6 | 1.1 | 2.6 | 2.6 | 3.5 | 3.6 | 0.49 | 0.55 | 2.2 | 1.8 | 0.6 | 1.07 | 2.6 | 2.5 |
| 20 | 90 | 91.4 | 12.5 | 9.9 | 56 | 53.3 | 14 | 27.9 | 1.2 | 1.2 | 90 | 91.4 | 12.5 | 13.9 | 56 | 45.7 | 14 | 27.2 | 1.2 | 1.1 |
| 1 | 4.3 | 4.4 | 0.68 | 0.69 | 2.7 | 2.7 | 0.7 | 1.3 | 4.6 | 4.3 | 4.3 | 4.4 | 0.68 | 0.71 | 2.7 | 2.3 | 0.7 | 1.33 | 4.6 | 3.9 |
| 25 | 110 | 111.8 | 17.5 | 17.5 | 69 | 68.6 | 18 | 33 | 2.1 | 2 | 110 | 111.8 | 17.5 | 18 | 69 | 58.4 | 18 | 33.8 | 2.1 | 1.8 |
| 1-1/4 | 5 | 4.7 | 0.88 | 0.9 | 3.2 | 3.3 | 0.9 | 1.7 | 7.5 | 11.5 | 5 | 4.7 | 0.88 | 0.95 | 3.2 | 3.3 | 0.9 | 1.67 | 7.5 | 10.6 |
| 32 | 127 | 119.4 | 22.5 | 22.9 | 80 | 83.8 | 24 | 43.2 | 3.4 | 5.2 | 127 | 119.4 | 22.5 | 24.1 | 80 | 83.8 | 24 | 42.4 | 3.4 | 4.8 |
| 1-1/2 | 6.1 | 6 | 1.14 | 1.18 | 3.7 | 3.7 | 1.2 | 1.2 | 11.7 | 9.9 | 6.1 | 4.7 | 1.14 | 1.14 | 3.7 | 3.1 | 1.2 | 1.92 | 11.7 | 8.8 |
| 40 | 155 | 152.4 | 29 | 29.9 | 95 | 94 | 29.5 | 30.5 | 5.3 | 4.5 | 130 | 119.4 | 29 | 29 | 95 | 78.7 | 29.5 | 48.8 | 5.3 | 4 |
| 2 | 6.7 | 6.8 | 1.38 | 1.45 | 4.1 | 4.4 | 1.4 | 1.5 | 17.2 | 17 | 6.7 | 5.5 | 1.38 | 1.44 | 4.1 | 3.7 | 1.4 | 2.41 | 17.2 | 13.2 |
| 50 | 170 | 172.7 | 35 | 36.8 | 105 | 111.8 | 36.5 | 38.1 | 7.8 | 7.7 | 150 | 139.7 | 35 | 36.6 | 105 | 94 | 36.5 | 61.2 | 7.8 | 6 |

| Size in. / mm | Class 1500 BB Lift A | | B | | C | | D | | Wt. | | Class 1500 BB Swing A | | B | | C | | D | | Wt. | |
|---|---|---|---|---|---|---|---|---|---|---|---|---|---|---|---|---|---|---|---|---|
| | 41 | 45 | 41 | 45 | 41 | 45 | 41 | 45 | 41 | 45 | 41 | 45 | 41 | 45 | 41 | 45 | 41 | 45 | 41 | 45 |
| 1/2 | 3.5 | 4.4 | 0.35 | 0.39 | 2.2 | 3.1 | 0.4 | 0.9 | 4.8 | 7.5 | 3.5 | 4.4 | 0.35 | 0.55 | 2.2 | 3.1 | 0.4 | 0.9 | 4.8 | 7.9 |
| 15 | 90 | 111.8 | 9 | 9.9 | 55 | 78.7 | 10 | 22.9 | 2.2 | 3.4 | 90 | 111.8 | 9 | 13.97 | 55 | 78.7 | 10 | 22.9 | 2.2 | 3.6 |
| 3/4 | 4.3 | 4.4 | 0.43 | 0.51 | 2.8 | 3.1 | 0.6 | 1.1 | 6.8 | 10.6 | 4.3 | 4.4 | 0.43 | 0.55 | 2.8 | 3.1 | 0.6 | 1.1 | 6.8 | 9.5 |
| 20 | 110 | 111.8 | 11 | 12.95 | 70 | 78.7 | 14 | 27.9 | 3.1 | 4.8 | 110 | 111.8 | 11 | 13.97 | 70 | 78.7 | 14 | 27.9 | 3.1 | 4.3 |
| 1 | 4.7 | 5.1 | 0.57 | 0.66 | 3 | 3.8 | 0.7 | 1.3 | 9.2 | 15.2 | 4.7 | 4.5 | 0.57 | 0.71 | 3 | 3.8 | 0.7 | 1.3 | 9.2 | 23.5 |
| 25 | 120 | 129.5 | 14.5 | 16.76 | 77 | 96.5 | 18 | 33 | 4.2 | 6.9 | 120 | 114.3 | 14.5 | 18.03 | 77 | 96.5 | 18 | 33 | 4.2 | 10.7 |
| 1-1/4 | 5.1 | - | 0.74 | - | 4.1 | - | 0.9 | - | 12.8 | - | 5.1 | - | 0.74 | - | 4.1 | - | 0.9 | - | 12.8 | - |
| 32 | 130 | - | 19 | - | 105 | - | 24 | - | 5.8 | - | 130 | - | 19 | - | 105 | - | 24 | - | 5.8 | - |
| 1-1/2 | 6.7 | 6.8 | 1.06 | 1.18 | 4.5 | 4.7 | 1.2 | 1.9 | 20.7 | 19.4 | 6.7 | 5.5 | 1.06 | 1.14 | 4.5 | 4.7 | 1.2 | 1.9 | 20.7 | 27.7 |
| 40 | 170 | 172.7 | 27 | 29.97 | 115 | 119.4 | 29.5 | 48.3 | 9.4 | 8.8 | 170 | 139.7 | 27 | 28.95 | 115 | 119.4 | 29.5 | 48.3 | 9.4 | 12.6 |
| 2 | 8.3 | 8.7 | 1.22 | 1.49 | 5.7 | 5.5 | 1.4 | 2.4 | 26.6 | 27.1 | 8.3 | 6.4 | 1.22 | 1.44 | 5.7 | 5.5 | 1.4 | 2.4 | 26.6 | 34.1 |
| 50 | 210 | 220.9 | 31 | 37.85 | 145 | 139.7 | 36 | 60.9 | 12.1 | 12.3 | 210 | 162.6 | 31 | 36.57 | 145 | 139.7 | 36 | 60.9 | 12.1 | 15.5 |

| Size in. / mm | Class 1500 WB Lift A | | B | | C | | D | | Wt. | | Class 1500 WB Swing A | | B | | C | | D | | Wt. | |
|---|---|---|---|---|---|---|---|---|---|---|---|---|---|---|---|---|---|---|---|---|
| | 41 | 45 | 41 | 45 | 41 | 45 | 41 | 45 | 41 | 45 | 41 | 45 | 41 | 45 | 41 | 45 | 41 | 45 | 41 | 45 |
| 1/2 | 3.5 | 4.4 | 0.35 | 0.39 | 2.2 | 3.1 | 0.4 | 0.9 | 2.9 | 7.5 | 3.5 | 4.4 | 0.35 | 0.55 | 2.2 | 3.1 | 0.4 | 0.9 | 2.9 | 7.9 |
| 15 | 90 | 111.8 | 9 | 9.9 | 55 | 78.7 | 10 | 22.9 | 1.3 | 3.4 | 90 | 111.8 | 9 | 13.97 | 55 | 78.7 | 10 | 22.9 | 1.3 | 3.6 |
| 3/4 | 4.3 | 4.4 | 0.43 | 0.51 | 2.8 | 3.1 | 0.6 | 1.1 | 5.5 | 10.6 | 4.3 | 4.4 | 0.43 | 0.55 | 2.8 | 3.1 | 0.6 | 1.1 | 5.5 | 9.5 |
| 20 | 110 | 111.8 | 11 | 12.95 | 70 | 78.7 | 14 | 27.9 | 2.5 | 4.8 | 110 | 111.8 | 11 | 13.97 | 70 | 78.7 | 14 | 27.9 | 2.5 | 4.3 |
| 1 | 4.7 | 5.1 | 0.57 | 0.66 | 3.2 | 3.8 | 0.7 | 1.3 | 8.4 | 15.2 | 4.7 | 4.5 | 0.57 | 0.71 | 3.2 | 3.8 | 0.7 | 1.3 | 8.4 | 23.5 |
| 25 | 120 | 129.5 | 14.5 | 16.76 | 80 | 96.5 | 18 | 33 | 3.8 | 6.9 | 120 | 114.3 | 14.5 | 18.03 | 80 | 96.5 | 18 | 33 | 3.8 | 10.7 |
| 1-1/4 | 5.1 | - | 0.74 | - | 3.5 | - | 0.9 | - | 12.1 | - | 5.1 | - | 0.74 | - | 3.5 | - | 0.9 | - | 12.1 | - |
| 32 | 130 | - | 19 | - | 90 | - | 24 | - | 5.5 | - | 130 | - | 19 | - | 90 | - | 24 | - | 5.5 | - |
| 1-1/2 | 6.7 | 6.8 | 1.06 | 1.18 | 3.9 | 4.7 | 1.2 | 1.9 | 18.3 | 19.4 | 6.7 | 5.5 | 1.06 | 1.14 | 3.9 | 4.7 | 1.2 | 1.9 | 18.3 | 27.7 |
| 40 | 170 | 172.7 | 27 | 29.97 | 100 | 119.4 | 29.5 | 48.3 | 8.3 | 8.8 | 170 | 139.7 | 27 | 28.95 | 100 | 119.4 | 29.5 | 48.3 | 8.3 | 12.6 |
| 2 | 8.3 | 8.7 | 1.22 | 1.49 | 4.5 | 5.5 | 1.4 | 2.4 | 24.2 | 27.1 | 8.3 | 6.4 | 1.22 | 1.44 | 4.5 | 5.5 | 1.4 | 2.4 | 24.2 | 34.1 |
| 50 | 210 | 220.9 | 31 | 37.85 | 115 | 139.7 | 36 | 60.9 | 11 | 12.3 | 210 | 162.6 | 31 | 36.57 | 115 | 139.7 | 36 | 60.9 | 11 | 15.5 |

### Typical Bill of Materials
*(See page 12 for available materials.)*

| Component | Material | ASTM Spec |
|---|---|---|
| Body | Carbon Steel | A105N |
| Seat Ring | Stainless Steel | A479-410 |
| Piston | Stainless Steel | A479-410 |
| Rivet | Brass | Commercial |
| Spring | Stainless Steel | A479-316 |
| Nameplate | Aluminum | Commercial |
| * Gasket | Stainless Steel 316 W/Graphite Spiral Wound | |
| Cap | Carbon Steel | A105N |
| Cap Bolt | Alloy Steel | A193-B7 |

**Note:** *Dimensions: Inches/Millimeters - Weights: Pounds/Kilograms. Larger sizes available on request. Dimensions are subject to change without notice.*