Newmans®

The Reliable Source

NEWCO - Forged Steel Valves

Gates • Globes • Swing Checks • Lift Checks

Product Line Technical Data

Corporate Headquarters
Houston, Texas
1300 Gazin St.
Houston, TX 77020
Tel: 713.675.8631
Fax: 713.675.1589
Toll Free: 800.231.3505
www.NewmansValve.com

Manufacturer of

Newco® COOPER® OIC® QuadroSphere®

Pressure Temperature Ratings - ASME B16.34 - 2004 (standard)

	°F / PSI	-20 to 100	200	300	400	500	600	650	700	750	800	850	900	950	1000	1050	1100	1150	1200
Class 150	A105*	285	260	230	200	170	140	125	110	95	80	65	50	35	20	-	-	-	-
	LF2*	290	260	230	200	170	140	125	110	95	80	65	50	35	20	-	-	-	-
	F11+	290	260	230	200	170	140	125	110	95	80	65	50	35	20	20**	20**	-	-
	F22+	290	260	230	200	170	140	125	110	95	80	65	50	35	20	20**	20**	-	-
	F5	290	260	230	200	170	140	125	110	95	80	65	50	35	20	20**	20**	20**	20**
	F9	290	260	230	200	170	140	125	110	95	80	65	50	35	20	20**	20**	20**	20**
	F91	290	260	230	200	170	140	125	110	95	80	65	50	35	20	20	20	20	20
Class 300	A105*	740	680	655	635	605	570	550	530	505	410	320	230	135	85	-	-	-	-
	LF2*	740	680	655	635	605	570	550	530	505	410	320	230	135	85	-	-	-	-
	F11+	750	750	720	695	665	605	590	570	530	510	485	450	320	215	145	95	65	40
	F22+	750	750	730	705	665	605	590	570	530	500	485	450	385	265	175	110	70	40
	F5	750	750	730	705	665	605	590	570	530	510	485	375	275	200	145	100	60	35
	F9	750	750	730	705	665	605	590	570	530	510	4185	450	375	255	170	115	75	50
	F91	750	750	730	705	665	605	590	570	530	510	485	450	385	365	360	300	225	145
Class 600	A105*	1480	1360	1310	1265	1205	1135	1100	1060	1015	825	640	460	275	170	-	-	-	-
	LF2*	1480	1360	1310	1265	1205	1135	1100	1060	1015	825	640	460	275	170	-	-	-	-
	F11+	1500	1500	1445	1385	1330	1210	1175	1135	1065	1015	975	900	640	430	290	190	130	80
	F22+	1500	1500	1455	1410	1330	1210	1175	1135	1065	1015	975	900	755	535	350	220	135	80
	F5	1500	1470	1400	1335	1290	1210	1175	1135	1065	1015	975	745	550	400	290	190	125	70
	F9	1500	1500	1455	1410	1330	1210	1175	1135	1065	1015	975	900	755	505	345	225	150	105
	F91	1500	1500	1455	1410	1330	1210	1175	1135	1065	1015	975	900	775	725	720	605	445	290
Class 800	A105*	1974	1810	1747	1689	1609	1515	1467	1414	1352	1098	850	613	365	227	-	-	-	-
	LF2*	1974	1810	1747	1689	1609	1515	1467	1414	1352	1098	850	613	365	227	-	-	-	-
	F11+	2000	2000	1925	1849	1774	1614	1569	1515	1419	1355	1298	1200	850	577	383	257	173	110
	F22+	2000	2000	1942	1880	1774	1614	1569	1515	1419	1355	1298	1200	1025	712	467	293	182	110
	F5	2000	1964	1876	1782	1724	1614	1569	1515	1419	1355	1298	995	733	530	383	257	165	93
	F9	2000	2000	1942	1880	1774	1614	1569	1515	1419	1355	1298	1200	1005	675	458	302	200	138
	F91	2000	2000	1942	1880	1774	1614	1569	1515	1419	1355	1298	1200	1032	968	960	805	595	383
Class 900	A105*	2220	2035	1965	1900	1810	1705	1650	1590	1520	1235	955	690	410	255	-	-	-	-
	LF2*	2220	2035	1965	1900	1810	1705	1650	1590	1520	1235	955	690	410	255	-	-	-	-
	F11+	2250	2250	2165	2080	1995	1815	1765	1705	1595	1525	1460	1350	955	650	430	290	195	125
	F22+	2250	2250	2185	2115	1995	1815	1765	1705	1595	1525	1460	1350	1160	800	525	330	205	125
	F5	2250	2210	2100	2005	1940	1815	1765	1705	1595	1525	1460	1120	825	595	430	290	185	105
	F9	2250	2250	2185	2115	1995	1815	1765	1705	1595	1525	1460	1350	1130	760	515	340	225	155
	F91	2250	2250	2185	2115	1995	1815	1765	1705	1595	1525	1460	1350	1160	1090	1080	905	670	430
Class 1500	A105*	3705	3395	3270	3170	3015	2840	2745	2665	2535	2055	1595	1150	685	430	-	-	-	-
	LF2*	3705	3395	3270	3170	3015	2840	2745	2665	2535	2055	1595	1150	685	430	-	-	-	-
	F11+	3750	3750	3610	3465	3325	3025	2940	2840	2660	2540	2435	2245	1595	1080	720	480	325	205
	F22+	3750	3750	3640	3530	3325	3025	2940	2840	2660	2540	2435	2245	1930	1335	875	550	345	205
	F5	3750	3680	3495	3345	3230	3025	2940	2840	2660	2540	2435	1870	1370	995	720	480	310	170
	F9	3750	3750	3640	3530	3325	3025	2940	2840	2660	2540	2435	2245	1885	1270	855	565	375	255
	F91	3750	3750	3640	3530	3325	3025	2940	2840	2660	2540	2435	2245	1930	1820	1800	1510	1115	720
Class 1690	A105*	4173	3824	3684	3571	3397	3199	3093	2999	2857	2316	1796	1295	772	484	-	-	-	-
	LF2*	4173	3824	3684	3571	3397	3199	3093	2999	2857	2316	1796	1295	772	484	-	-	-	-
	F11+	4225	4225	4067	3904	3746	3408	3313	3199	2996	2861	2744	2530	1796	1217	811	541	367	232
	F22+	4225	4225	4102	3977	3746	3408	3313	3199	2996	2861	2744	2530	2175	1505	985	619	388	232
	F5	4225	4146	3939	3768	3639	3408	3313	3199	2996	2861	2744	2107	1544	1120	811	541	349	192
	F9	4225	4225	4102	3977	3746	3408	3313	3199	2996	2861	2744	2530	2124	1431	964	637	423	288
	F91	4225	4225	4102	3977	3746	3408	3313	3199	2996	2861	2744	2530	2175	2050	2028	1701	1256	811
Class 2500	A105*	6170	5655	5450	5280	5025	4730	4575	4425	4230	3430	2655	1915	1145	715	-	-	-	-
	LF2*	6170	5655	5450	5280	5025	4730	4575	4425	4230	3430	2655	1915	1145	715	-	-	-	-
	F11+	6250	6250	6015	5775	5540	5040	5905	4730	4430	4230	4060	3745	2655	1800	1200	800	545	345
	F22+	6250	6250	6070	5880	5540	5040	4905	4730	4430	4230	4060	3745	3220	2230	1455	915	570	345
	F5	6250	6135	5830	5570	5385	5040	4905	4730	4430	4230	4060	3115	2285	1655	1200	800	515	285
	F9	6250	6250	6070	5880	5540	5040	4905	4730	4430	4230	4060	3745	3145	2115	1430	945	630	430
	F91	6250	6250	6070	5880	5540	5040	4905	4730	4430	4230	4060	3745	3220	3030	3000	2515	1855	1200
Class 2680	A105*	6615	6063	5843	5660	5386	5071	4905	4743	4534	3677	2847	2054	1227	766	-	-	-	-
	LF2*	6615	6063	5843	5660	5386	5071	4905	4743	4534	3677	2847	2054	1227	766	-	-	-	-
	F11+	6700	6700	6448	6191	5938	5403	5258	5071	4749	4534	4352	4015	2847	1930	1286	858	584	369
	F22+	6700	6700	6507	6303	5938	5403	5258	5071	4749	4534	4352	4015	3452	2390	1560	981	611	369
	F5	6700	6576	6249	5971	5772	5403	5258	5071	4749	4534	4352	3339	2450	1775	1286	858	552	306
	F9	6700	6700	6507	6303	5938	5403	5258	5071	4749	4534	4352	4015	3371	2267	1533	1013	675	461
	F91	6700	6700	6507	6303	5938	5403	5258	5071	4749	4534	4352	4015	3452	3248	3216	2696	1989	1286
Class 4500	A105*	11110	10185	9815	9505	9040	8515	8240	7960	7610	6170	4785	3455	2055	1285	-	-	-	-
	LF2*	11110	10185	9815	9505	9040	8515	8240	7960	7610	6170	4785	3455	2055	1285	-	-	-	-
	F11+	11250	11250	10830	10400	9965	9070	8825	8515	7970	7610	7305	6740	4785	3240	2160	1440	975	615
	F22+	11250	11250	10925	10585	9965	9070	8825	8515	7970	7610	7305	6740	5795	4010	2625	1645	1030	615
	F5	11250	11040	10490	10030	9690	9070	8825	8515	7970	7610	7305	5605	4115	2985	2160	1440	925	515
	F9	11250	11250	10925	10585	9965	9070	8825	8515	7970	7610	7305	6740	5655	3805	2570	1695	1130	770
	F91	11250	11250	10925	10586	9965	9070	8825	8515	7970	7610	7305	6740	5795	5450	5400	4525	3345	2160

** Not recommended for prolonged use above 800° F. + Not recommended for prolonged use above 1100° F. ** For weld end valves only. Flanged end ratings terminate at 1000° F.*
***Note:** Packing, gasket, or bolting may limit temperature. Please advise service temperature if above 1000° F. Ratings from ASME B16.34 standard class valves. Special class weld end valves to ASME B16.34 are available on special order.*

Valve & I.D. Tag Overview

The identification tag displays all construction and tracking data regarding the respective valve on which it is attached. Below is a general overview of the identification tag components.

I.D. Tags are located under the handwheel nut.

Globe and Check Valves will have a flow direction arrow on body for proper installation.

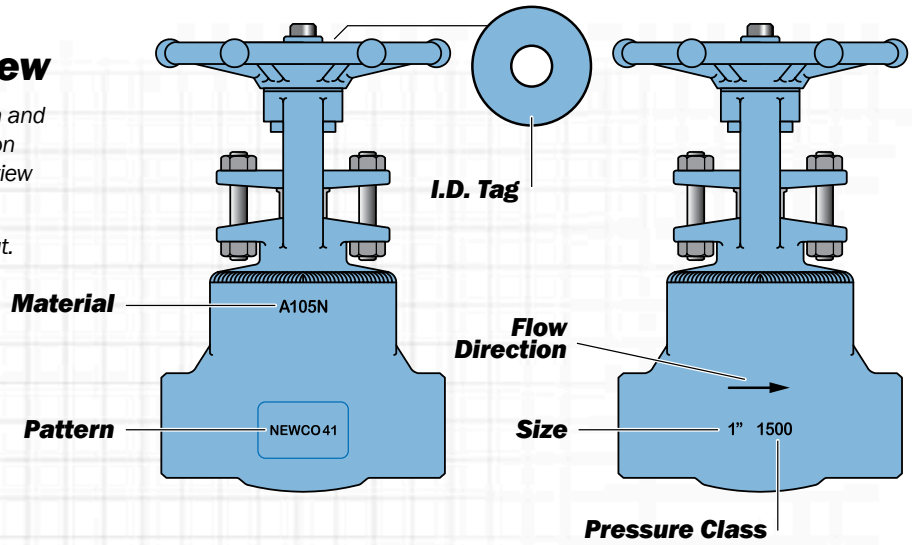

NEWCO 41 I.D. Tag

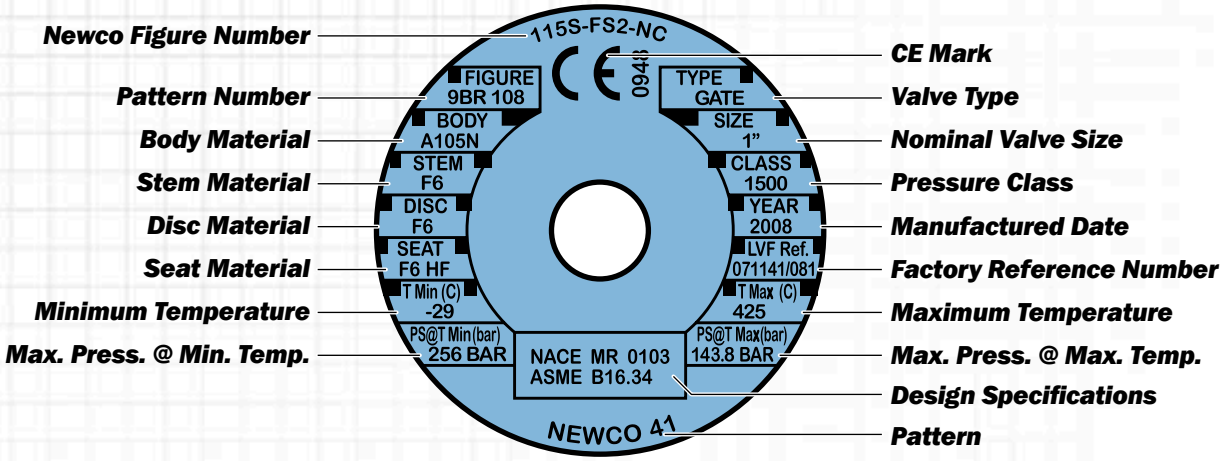

NEWCO 45 I.D. Tag

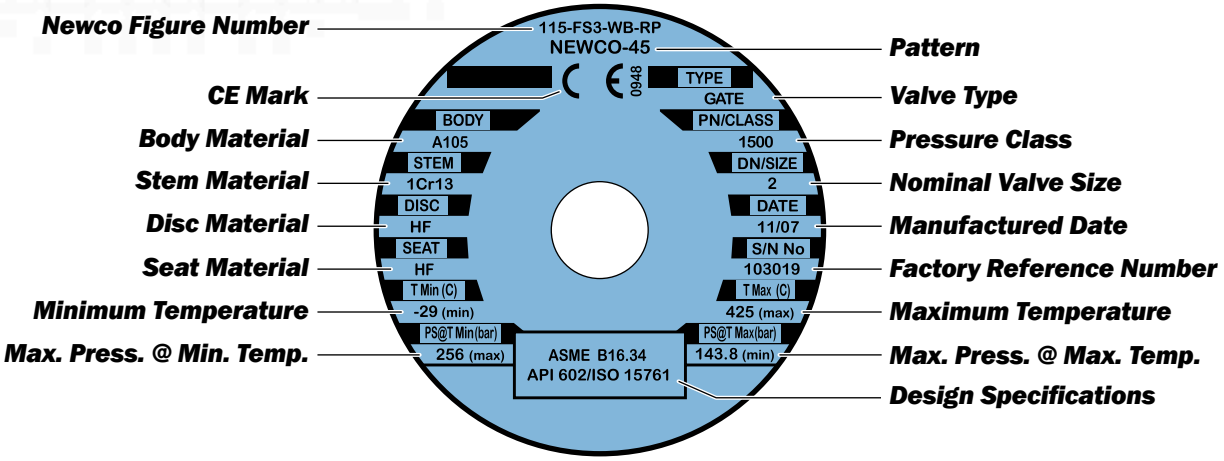

Body/Bonnet Materials

Newco forged steel valves are available in stock in a wide range of body/bonnet materials and optional trim materials. Listed below are some of the more popular materials. Additional materials are available. Please contact Newmans or your local distributor for details.

Newco Material Designation	Common Description	ASTM Specs.	Body/Bonnet Material Service Limitations*
FS	Carbon Steel	A105	Non-corrosive service water, oil, & gases at temperatures between -20° F & +800° F
LF2	Low Temp Carbon	A350	Low temperature service between -50° F & +800° F
F11	1.25% Chrome & .5% Moly	A182	Non-corrosive service water, oil, & gases at temperatures between -20° F & +1100° F
F22	2.25% Chrome & 1% Moly	A182	Non-corrosive service water, oil, & gases at temperatures between -20° F & +1100° F
F5	5% Chrome & .5% Moly	A182	Corrosive, non-corrosive, or erosive service at temperatures between -20° F & +1200° F
F9	9% Chrome & 1% Moly	A182	Corrosive, non-corrosive, or erosive service at temperatures between -20° F & +1200° F
F91	9% Chrome, 1% Moly, & V	A182	Corrosive, non-corrosive, or erosive service at temperatures between -20° F & +1200° F
F316	316	A182	Corrosive, cryogenic or high temperature service between -450° F & +1200° F

** Limitations are per 2004 Edition of ASME B16.34.*

Trim Materials

The following are Newco's standard trim designations.

Newco Trim Number	Common Name	API 600 Trim No.	Seat Ring Facing (1)	Wedge or Disc Facing (1)	Stem	Other Trim Parts (2)	Service Limitations
1	13 Chrome	1	CR 13	CR 13	CR 13	CR 13	Non-corrosive applications. Steam, gas, & general service to 700° F. Oil & oil vapor to 900° F
2	Half Stellite	8	HF	CR 13	CR 13	CR 13	Steam, gas, & general service to 1000° F. Standard trim for gate valves
3	Full Stellite	5	HF	HF	CR 13	CR 13	Premium trim service to 1200° F. Excellent for high pressure water and steam service
4	316	10	316	316	316	316	Corrosive services to 850° F. Low temperature service standard for 316 SS valves
4/2	316/Half Stellite	12	HF	316	316	316	
4/3	316/Full Stellite	16	HF	HF	316	316	
5	Monel	9	NiCu	NiCu	NiCu	NiCu	Corrosive services to 750° F
5/2	Monel/Half Stellite	11	HF	NiCu	NiCu	NiCu	
5/3	Monel/Full Stellite	-	HF	HF	NiCu	NiCu	
6	Alloy 20	13	A20	A20	A20	A20	Corrosive services to 300° F
X	Special	Special	Special	Special	Special	Special	Customer to specify

(1) Facing is defined as the seating surface of a seat ring and wedge/disc
(2) Other trim parts are defined as small internal parts that are normally in contact with the service fluid. This includes the stem, etc. in gate and globe valves and the swing check disc nut

Newco Features and Benefits

- Material Test Reports
- International Organization for Standardization (ISO)
- Traceability
- Fugitive Emissions Tested
- API-598 Tested
- Major End-user Approved
- Ship from Multiple North American Locations
- Extensive Engineering Capabilities
- Excellent Customer Service
- Warranty
- Field Services for Start-up
- In-house Automation Capabilities

How to Order All Newco Products

Note: *OIC and Cooper "How to Order" information can be found in their respective catalogs.*

Figure Number

The figure number shown below identifies specific valve configuration details of Newco valves such as valve type, pressure class, end connections, body/bonnet & trim materials, and special features.

Please specify end connections, body materials, and trims not listed below.

When placing an order, please refer to the respective product section of the catalog for size availability. A detailed description must be included with any special orders.

Type

1 = Gate, OS&Y
2 = Globe/Globe Stop Check, OS&Y
3 = Swing/Tilting Disc Check
4 = Piston Check
5 = Ball
6 = Gate, NRS
7 = Angle/Angle Stop Check, OS&Y

Fig. 18T-FS2__

Body/Bonnet Material

A20	ASTM A351, CN7M	Cast Alloy 20
CB	ASTM A216, WCB	Cast Carbon Steel
CC	ASTM A216, WCC	Cast Carbon Steel
C5	ASTM A217, C5	Cast Alloy Steel (5% Chrome, .5% Moly)
C6	ASTM A217, WC6	Cast Alloy Steel (1.25% Chrome, .5% Moly)
C9	ASTM A217, WC9	Cast Alloy Steel (2.25% Chrome, 1% Moly)
C12	ASTM A217, C12	Cast Alloy Steel (9% Chrome, 1% Moly)
12A	ASTM A217, C12A	Cast Alloy Steel (9% Chrome, 1% Moly, V)
CF3	ASTM A351, CF3	Cast Stainless Steel
C3M	ASTM A351, CF3M	Cast 316L Stainless Steel
CF8	ASTM A351, CF8	Cast 304 Stainless Steel
C7L	ASTM A351, CG3M	Cast 317L Stainless Steel
C8M	ASTM A351, CF8M	Cast 316 Stainless Steel
C8C	ASTM A351, CF8C	Cast 347 Stainless Steel
CT	ASTM A351, CG8M	Cast 317 Stainless Steel
DI	ASTM A395	Cast Ductile Iron
FS	ASTM A105	Forged Carbon Steel
F3M	ASTM A182, F316L	Forged 316 Stainless Steel
F5	ASTM A182, F5	Forged Alloy Steel (5% Chrome, .5% Moly)
F7	ASTM A182, 317	Forged 317 Stainless Steel
F7L	ASTM A182, F317L	Forged 317L Stainless Steel
F11	ASTM A182, F11	Forged Alloy Steel (1.25% Chrome, .5% Moly)
F22	ASTM A182, F22	Forged Alloy Steel (2.25% Chrome, 1% Moly)
F9	ASTM A182, F9	Forged Alloy Steel (9% Chrome, 1% Moly)
F91	ASTM A182, F91	Forged Alloy Steel (9% Chrome, 1% Moly, V)
F8	ASTM A182, F304	Forged 304 Stainless Steel
F8M	ASTM A182, F316	Forged 316 Stainless Steel
F8C	ASTM A182, F321	Forged 321 Stainless Steel
IB	ASTM A126, CLB	Cast Iron
LCC	ASTM A352, LCC	Cast Low Temperature Carbon Steel
LF2	ASTM A350, LF2	Forged Low Temperature Carbon Steel
MO	ASTM A414, M35	Cast NI Cu (Monel***)
SPL	Special (Customer to specify)	

Pressure Class

1 = 150
2 = 125
3 = 300
6 = 600
8 = 800
9 = 900
15 = 1500
16 = 1690
25 = 2500
26 = 2680
45 = 4500

End Connections

F = Flanged
J = RTJ
S = Socket Weld
T = Threaded
W = Butt Weld
X = Threaded x Socket Weld

Trim Material / API Trim =

1	CR13	1, 4, 8A
2	CR13/HF**	8
3	CR13/FHF**	5
4	316	10
4/2	316/HF**	12
4/3	316/FHF**	16
5	NI Cu (Monel***)	9
5/2	Monel/HF**	11
6	Alloy 20	13
7	Bronze	N/A
A7	Aluminum Bronze	N/A
8	Iron	N/A
9	Special (Customer to Specify)	

Suffix Letters

BP = By Pass
BS = Bellows Seal
CL = Chlorine Service
CR = Cryogenic Service
CW = Chain Wheel
EB = Extended Body
FP = Full Port
FS = Fire Safe
GI = Grease Injection
GO = Gear Operated
HB = Horizontal Ball Check
HP = Horizontal Piston Check
HO = Hydraulic Operator
INT = Integral Flanged
LD = Locking Device
LL = Locking Loop
LV = Live Load Packing
MO = Motor Operated
NC = NACE MR0103 Compliant
OL = Outside Weight & Lever
OX = Oxygen Service
PO = Pneumatic Operator
PS = Pressure Seal Bonnet
PT = PTFE Seats
QS = QuadroSphere
RP = Regular Port
SC = Stop Check
SL = Spring Loading
SPL = Special (Customer to specify)
TD = Tilting Disc Check
TF = Teflon* Insert
TM = Trunnion Mounted
VP = Vertical Ball Check
VL = Vertical Lift Check
VP = V-Port Disc
VT = Viton* Insert
WB = Welded Bonnet
Y = Y Pattern
* = Viton and Teflon are registered trademarks of DuPont Company
**HF= Hardfaced - AWS 5.13 Class C_oC_rA
*** = Monel is a registered trademark of International Nickel Company

Typical Newco Forged Steel Bolted Check Valve Expanded View

1. Body: *Newco forged steel bodies provide low resistance flow and optimum strength and performance.*

2. Cover Studs: *The cover studs secure the bonnet to the body.*

3. Cover: *The cover allows access to internal components.*

4. Spring: *The spring is precision made and loaded for precise pressures.*

5. Piston: *Newmans piston is machined to the tightest tolerances to ensure trouble free shutoff and cycling.*

6. Cover Gasket: *The cover gasket creates a leak-proof seal between the bonnet and the body.*

7. Seat: *The seat ensures a stable shutoff. The seat is precision ground for optimal seating.*

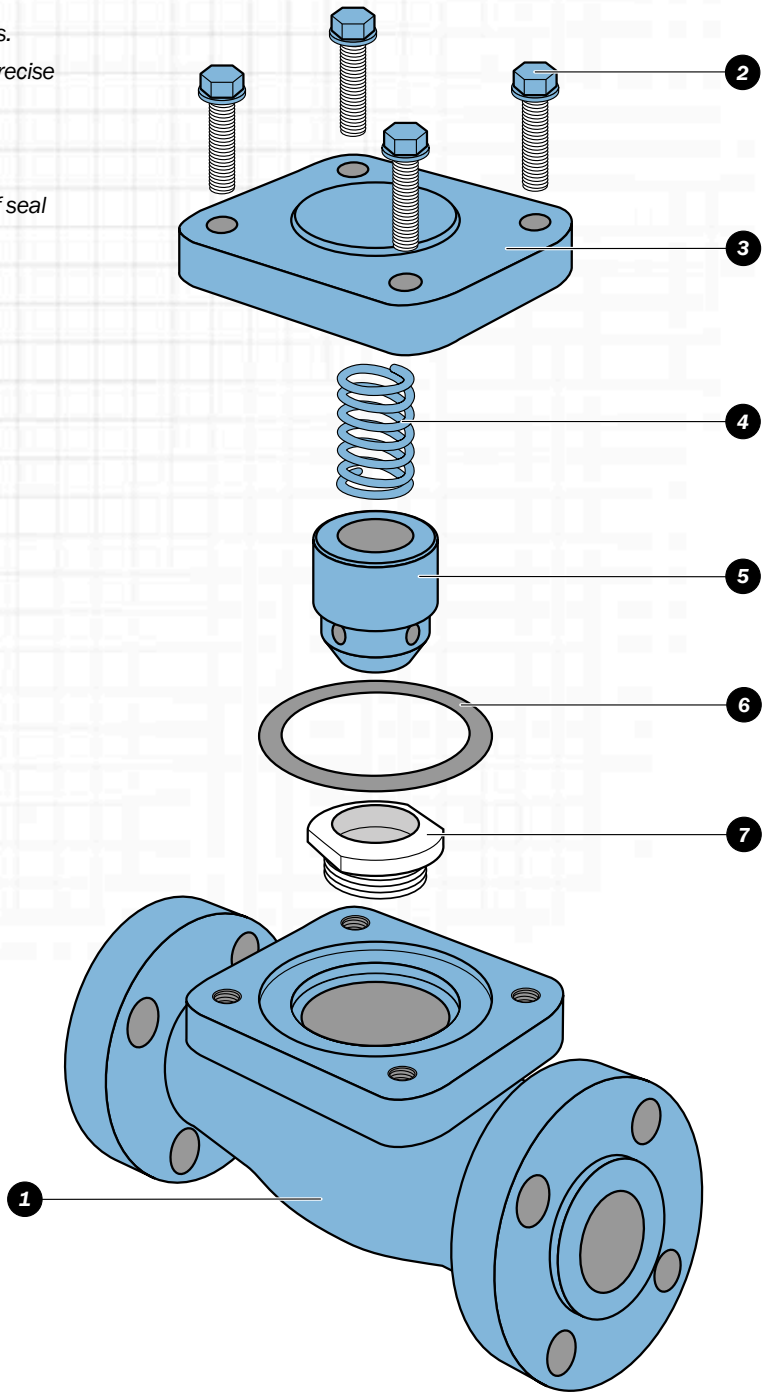

Forged Steel Lift & Swing Checks
Bolted & Welded Cover
Conventional Port
Class 800 thru 1500
Sizes: 1/2" thru 2" (1/4" & 3/8" available upon request)

Design and Manufacturing Standards

Valve Design: *API 602*
Pipe Threads, General Purpose, Inch: *ASME B1.20.1*
Socket Welding: *ASME B16.11*
Tested in Accordance with: *API 598*
Recommended Spare Parts*

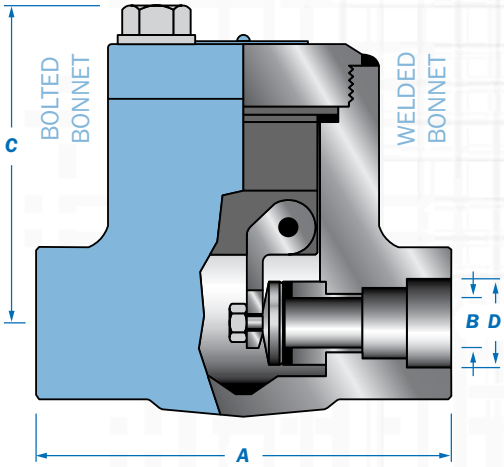

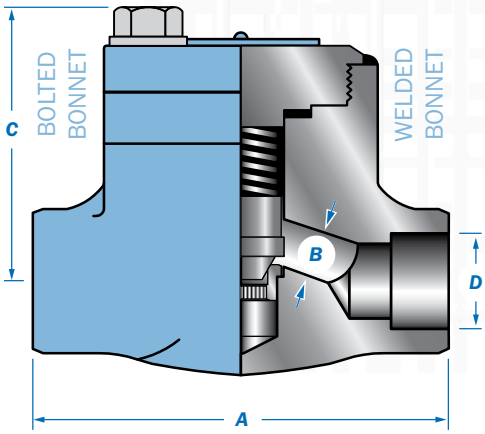

Class 800 thru 1500
Bolted & Welded Bonnet Lift & Swing Check

Size in. / mm	Class 800 BB Lift A		B		C		D		Wt.		Class 800 BB Swing A		B		C		D		Wt.	
	41	45	41	45	41	45	41	45	41	45	41	45	41	45	41	45	41	45	41	45
1/2	3.2	3.1	0.35	0.39	1.9	1.9	0.4	0.9	2.4	2.1	3.2	3.1	0.35	0.39	1.9	1.6	0.4	0.85	2.4	2.1
15	80	78.7	9	9.9	49	49	10	24	1.1	1	80	78.7	9	9.9	49	40.6	10	21.6	1.1	1
3/4	3.5	3.6	0.49	0.39	2.2	2.1	0.6	1.1	4	2.6	3.5	3.6	0.49	0.55	2.2	1.8	0.6	1.07	4	2.5
20	90	91.4	12.5	9.9	55	53.3	14	27.9	1.8	1.2	90	91.4	12.5	13.9	55	45.7	14	27.2	1.8	1.1
1	4.3	4.4	0.68	0.69	2.8	2.7	0.7	1.3	5.7	4.3	4.3	4.4	0.68	0.71	2.8	2.3	0.7	1.33	5.7	3.9
25	110	111.8	17.5	17.5	70	68.6	18	33	2.6	2	110	111.8	17.5	18	70	58.4	17.8	33.8	2.6	1.8
1-1/4	5	4.7	0.88	0.9	3	3.3	0.9	1.7	7.9	11.5	5	4.7	0.88	0.95	3	3.3	0.9	1.67	7.9	10.6
32	127	119.4	22.5	22.9	77	83.8	24	43.2	3.6	5.2	127	119.4	22.5	24.1	77	83.8	24	42.4	3.6	4.8
1-1/2	6.1	6	1.14	1.18	4.1	3.7	1.2	1.2	12.1	9.9	6.1	4.7	1.14	1.14	4.1	3.1	1.2	1.92	12.1	8.8
40	155	152.4	29	29.9	105	94	29.5	30.5	5.5	4.5	130	119.4	29	29	105	78.7	29.5	48.8	5.5	4
2	6.7	6.8	1.38	1.45	4.7	4.4	1.4	1.5	18.5	17	5.1	5.5	1.44	1.44	4.7	3.7	2.4	2.4	19.6	13.2
50	170	172.7	35	36.8	120	111.8	36.5	38.1	8.4	7.7	130	139.7	36.6	36.6	119	94	61	61	8.9	6

Size in. / mm	Class 800 WB Lift A		B		C		D		Wt.		Class 800 WB Swing A		B		C		D		Wt.	
	41	45	41	45	41	45	41	45	41	45	41	45	41	45	41	45	41	45	41	45
1/2	3.2	3.1	0.35	0.39	1.9	1.9	0.4	0.9	2	2.1	3.2	3.1	0.35	0.39	1.9	1.6	0.4	0.85	2	2.1
15	80	78.7	9	9.9	49	49	10	24	0.9	1	80	78.7	9	9.9	49	40.6	10	21.6	0.9	1
3/4	3.5	3.6	0.49	0.39	2.2	2.1	0.6	1.1	2.6	2.6	3.5	3.6	0.49	0.55	2.2	1.8	0.6	1.07	2.6	2.5
20	90	91.4	12.5	9.9	56	53.3	14	27.9	1.2	1.2	90	91.4	12.5	13.9	56	45.7	14	27.2	1.2	1.1
1	4.3	4.4	0.68	0.69	2.7	2.7	0.7	1.3	4.6	4.3	4.3	4.4	0.68	0.71	2.7	2.3	0.7	1.33	4.6	3.9
25	110	111.8	17.5	17.5	69	68.6	18	33	2.1	2	110	111.8	17.5	18	69	58.4	18	33.8	2.1	1.8
1-1/4	5	4.7	0.88	0.9	3.2	3.3	0.9	1.7	7.5	11.5	5	4.7	0.88	0.95	3.2	3.3	0.9	1.67	7.5	10.6
32	127	119.4	22.5	22.9	80	83.8	24	43.2	3.4	5.2	127	119.4	22.5	24.1	80	83.8	24	42.4	3.4	4.8
1-1/2	6.1	6	1.14	1.18	3.7	3.7	1.2	1.2	11.7	9.9	6.1	4.7	1.14	1.14	3.7	3.1	1.2	1.92	11.7	8.8
40	155	152.4	29	29.9	95	94	29.5	30.5	5.3	4.5	130	119.4	29	29	95	78.7	29.5	48.8	5.3	4
2	6.7	6.8	1.38	1.45	4.1	4.4	1.4	1.5	17.2	17	6.7	5.5	1.38	1.44	4.1	3.7	1.4	2.41	17.2	13.2
50	170	172.7	35	36.8	105	111.8	36.5	38.1	7.8	7.7	150	139.7	35	36.6	105	94	36.5	61.2	7.8	6

Size in. / mm	Class 1500 BB Lift A		B		C		D		Wt.		Class 1500 BB Swing A		B		C		D		Wt.	
	41	45	41	45	41	45	41	45	41	45	41	45	41	45	41	45	41	45	41	45
1/2	3.5	4.4	0.35	0.39	2.2	3.1	0.4	0.9	4.8	7.5	3.5	4.4	0.35	0.55	2.2	3.1	0.4	0.9	4.8	7.9
15	90	111.8	9	9.9	55	78.7	10	22.9	2.2	3.4	90	111.8	9	13.97	55	78.7	10	22.9	2.2	3.6
3/4	4.3	4.4	0.43	0.51	2.8	3.1	0.6	1.1	6.8	10.6	4.3	4.4	0.43	0.55	2.8	3.1	0.6	1.1	6.8	9.5
20	110	111.8	11	12.95	70	78.7	14	27.9	3.1	4.8	110	111.8	11	13.97	70	78.7	14	27.9	3.1	4.3
1	4.7	5.1	0.57	0.66	3	3.8	0.7	1.3	9.2	15.2	4.7	4.5	0.57	0.71	3	3.8	0.7	1.3	9.2	23.5
25	120	129.5	14.5	16.76	77	96.5	18	33	4.2	6.9	120	114.3	14.5	18.03	77	96.5	18	33	4.2	10.7
1-1/4	5.1	-	0.74	-	4.1	-	0.9	-	12.8	-	5.1	-	0.74	-	4.1	-	0.9	-	12.8	-
32	130	-	19	-	105	-	24	-	5.8	-	130	-	19	-	105	-	24	-	5.8	-
1-1/2	6.7	6.8	1.06	1.18	4.5	4.7	1.2	1.9	20.7	19.4	6.7	5.5	1.06	1.14	4.5	4.7	1.2	1.9	20.7	27.7
40	170	172.7	27	29.97	115	119.4	29.5	48.3	9.4	8.8	170	139.7	27	28.95	115	119.4	29.5	48.3	9.4	12.6
2	8.3	8.7	1.22	1.49	5.7	5.5	1.4	2.4	26.6	27.1	8.3	6.4	1.22	1.44	5.7	5.5	1.4	2.4	26.6	34.1
50	210	220.9	31	37.85	145	139.7	36	60.9	12.1	12.3	210	162.6	31	36.57	145	139.7	36	60.9	12.1	15.5

Size in. / mm	Class 1500 WB Lift A		B		C		D		Wt.		Class 1500 WB Swing A		B		C		D		Wt.	
	41	45	41	45	41	45	41	45	41	45	41	45	41	45	41	45	41	45	41	45
1/2	3.5	4.4	0.35	0.39	2.2	3.1	0.4	0.9	2.9	7.5	3.5	4.4	0.35	0.55	2.2	3.1	0.4	0.9	2.9	7.9
15	90	111.8	9	9.9	55	78.7	10	22.9	1.3	3.4	90	111.8	9	13.97	55	78.7	10	22.9	1.3	3.6
3/4	4.3	4.4	0.43	0.51	2.8	3.1	0.6	1.1	5.5	10.6	4.3	4.4	0.43	0.55	2.8	3.1	0.6	1.1	5.5	9.5
20	110	111.8	11	12.95	70	78.7	14	27.9	2.5	4.8	110	111.8	11	13.97	70	78.7	14	27.9	2.5	4.3
1	4.7	5.1	0.57	0.66	3.2	3.8	0.7	1.3	8.4	15.2	4.7	4.5	0.57	0.71	3.2	3.8	0.7	1.3	8.4	23.5
25	120	129.5	14.5	16.76	80	96.5	18	33	3.8	6.9	120	114.3	14.5	18.03	80	96.5	18	33	3.8	10.7
1-1/4	5.1	-	0.74	-	3.5	-	0.9	-	12.1	-	5.1	-	0.74	-	3.5	-	0.9	-	12.1	-
32	130	-	19	-	90	-	24	-	5.5	-	130	-	19	-	90	-	24	-	5.5	-
1-1/2	6.7	6.8	1.06	1.18	3.9	4.7	1.2	1.9	18.3	19.4	6.7	5.5	1.06	1.14	3.9	4.7	1.2	1.9	18.3	27.7
40	170	172.7	27	29.97	100	119.4	29.5	48.3	8.3	8.8	170	139.7	27	28.95	100	119.4	29.5	48.3	8.3	12.6
2	8.3	8.7	1.22	1.49	4.5	5.5	1.4	2.4	24.2	27.1	8.3	6.4	1.22	1.44	4.5	5.5	1.4	2.4	24.2	34.1
50	210	220.9	31	37.85	115	139.7	36	60.9	11	12.3	210	162.6	31	36.57	115	139.7	36	60.9	11	15.5

Typical Bill of Materials
(See page 12 for available materials.)

Component	Material	ASTM Spec
Body	Carbon Steel	A105N
Seat Ring	Stainless Steel	A479-410
Piston	Stainless Steel	A479-410
Rivet	Brass	Commercial
Spring	Stainless Steel	A479-316
Nameplate	Aluminum	Commercial
* Gasket	Stainless Steel 316 W/Graphite Spiral Wound	
Cap	Carbon Steel	A105N
Cap Bolt	Alloy Steel	A193-B7

Note: *Dimensions: Inches/Millimeters - Weights: Pounds/Kilograms. Larger sizes available on request. Dimensions are subject to change without notice.*